autovictor

**TC 2800-1** Truck Crane 600 t Lifting Capacity

# TC 2800-1

## TRUCK CRANE

autovictor

TC 2800-1

# HIGHLIGHTS

- Great flexibility ensures considerable time and cost savings for transport and erection
- Large outrigger base gives outstanding lifting capacities and a maximum boom length of 192 m
- Significantly reduced transport units by comparison with the corresponding crawler crane model
- Basic machine roadable incl. all drums and A-frame within 12 tonne axle load limit
- Power-Kit for main boom
- Innovative Demag IC-1 crane control system with touchscreen

**The technical data at a glance:**

| | |
|---|---|
| Max. lifting capacity: | 600 t |
| Max. load moment: | 7546 tm |
| Max. boom length: | 96 + 96 m |
| Max. travel speed: | 75 km/h |
| Carrier length: | 17.95 m |
| Transport weight: | 92 t |
| Drive / steering: | 16 x 8 x 16 |
| Max. gradeability: | 43 % |

- Enorme Flexibilität bringt Zeit- und Kostenersparnis in puncto Transport und Aufbau
- Große Stützbasis ermöglicht enorme Tragfähigkeiten und eine maximale Auslegerlänge von 192 m
- Deutlich reduzierte Transporteinheiten im Vergleich zum entsprechenden Raupenkran
- Grundgerät inkl. allen Winden und A-Bock innerhalb der 12 t-Achslastbegrenzung verfahrbar
- Hauptausleger-Verstärkungs-Kit
- Innovative Kransteuerung Demag IC-1 mit Touchscreen

**Die technischen Daten auf einen Blick:**

| | |
|---|---|
| Max. Tragfähigkeit: | 600 t |
| Max. Lastmoment: | 7546 mt |
| Max. Auslegerlänge: | 96 + 96 m |
| Max. Fahrgeschwindigkeit: | 75 km/h |
| Fahrgestell-Länge: | 17,95 m |
| Transportgewicht: | 92 t |
| Antrieb / Lenkung: | 16 x 8 x 16 |
| Max. Steigfähigkeit: | 43 % |

- Grande flexibilité assurant des économies financières et un gain de temps considérables en matière de transport et de montage
- Large base d'appui permettant d'excellentes capacités de levage et une longueur de flèche maximale de 192 m
- Unités de transport nettement réduites par comparaison avec le modèle sur chenilles correspondant
- Machine de base peut être déplacée sur route avec tous les treuils et le chevalet, dans les limites de poids à l'essieu de 12 tonnes
- Kit à fortifier de flèche principale
- Nouveau système de contrôle Demag IC-1 avec écran tactile

**Les caractéristiques techniques en un coup d'œil:**

| | |
|---|---|
| Capacité de levage maxi: | 600 t |
| Couple de charge maxi: | 7546 tm |
| Longueur de flèche maxi: | 96 + 96 m |
| Vitesse sur route maxi: | 75 km/h |
| Longueur du châssis: | 17,95 m |
| Poids total roulant: | 92 t |
| Entraînement / direction: | 16 x 8 x 16 |
| Capacité sur rampes: | 43 % |

# CONTENTS · INHALT · CONTENU

Page · Seite · Page:

**Specifications · Technische Daten · Caractéristiques**
Specifications · Technische Daten · Caractéristiques . . . . . 4
Superlift configurations · Superlift-Konfigurationen · Combinaisons Superlift . . . . . 6
Specifications · Technische Daten · Caractéristiques . . . . . 7
Boom combinations · Ausleger-Kombinationen · Combinaisons de flèche . . . . . 10
Erection / lowering · Aufrichten / Ablegen · Monter / déposer . . . . . 12

1

**Main boom · Hauptausleger · Flèche principale**
Working ranges · Arbeitsbereiche · Portées (SH, SH / LH) . . . . . 13
Lifting capacities · Tragfähigkeiten · Capacités de levage (SH, SH / LH) . . . . . 14
Working ranges with Superlift · Arbeitsbereiche mit Superlift · Portées avec Superlift (SSL/HSSL, SSL/LSL) . . . . . 16
Lifting capacities with Superlift · Tragfähigkeiten mit Superlift · Capacités de levage avec Superlift (SSL/HSSL, SSL/LSL) . . . . . 17

2

**Fixed fly jib · Starrer Hilfsausleger · Fléchette fixe**
Working ranges, 10° · Arbeitsbereiche, 10° · Portées, 10° (SH + LF2, SH/LH + LF2) . . . . . 21
Lifting capacities · Tragfähigkeiten · Capacités de levage (SH + LF2, SH/LH + LF2) . . . . . 22
Working ranges with SL, 10° · Arbeitsbereiche mit SL, 10° · Portées avec SL, 10° (SSL + LF2, SSL/LSL + LF2) . . . . . 26
Lifting capacities with SL · Tragfähigkeiten mit SL · Capacités de levage avec SL (SSL + LF2, SSL/LSL + LF2) . . . . . 27

3

**Luffing fly jib · Wippbarer Hilfsausleger · Fléchette à volée variable**
Working ranges · Arbeitsbereiche · Portées (SW) . . . . . 36
Lifting capacities · Tragfähigkeiten, Hauptausleger · Capacités de levage (SW) . . . . . 37
Working ranges · Arbeitsbereiche · Portées (SWSL) . . . . . 44
Lifting capacities with SL · Tragfähigkeiten mit SL · Capacités de levage avec SL (SWSL / SFSL 15° / HSWSL) . . . . . 45

4

**Fixed fly jib · Starrer Hilfsausleger · Fléchette fixe**
Working ranges with SL, 13° · Arbeitsbereiche mit SL, 13° · Portées avec SL, 13° (SFVL / LFVL) . . . . . 58
Lifting capacities with SL · Tragfähigkeiten mit SL · Capacités de levage avec SL (SFVL / LFVL) . . . . . 59

5

**Technical description · Technische Beschreibung · Descriptif technique**
Carrier · Superstructure · Optional equipment . . . . . 62
Boom configurations S and L . . . . . 63
Unterwagen · Oberwagen · Zusatzausrüstung . . . . . 64
Auslegervarianten S und L . . . . . 65
Châssis · Partie supérieure · Equipements optionnels . . . . . 66
Configurations de flèche S et L . . . . . 67

6

## SPECIFICATIONS · TECHNISCHE DATEN · CARACTÉRISTIQUES

### WORKING SPEEDS (INFINITELY VARIABLE) · ARBEITSGESCHWINDIGKEITEN (STUFENLOS REGELBAR) · VITESSES DE TRAVAIL (RÉGLABLES SANS PALIERS)

| Mechanisms<br>Antriebe<br>Mécanismes | Rope ø<br>Seil-ø<br>ø du câble | Speeds[1)]<br>Geschwindigkeiten[1)]<br>Vitesses[1)] | Single line pull[2)]<br>Seilzug je Strang[2)]<br>Effort sur brin simple[2)] | Length of hoist rope<br>Länge des Hubseils<br>Longueur du câble de levage |
|---|---|---|---|---|
| Hoist I (H1)<br>Hubwerk I (H1)<br>Treuil de levage I (H1) | 28 mm | max. 120 m / min | 158 kN | 900 m |
| Hoist II (H2)<br>Hubwerk II (H2)<br>Treuil de levage II (H2) | 28 mm | max. 120 m / min | 158 kN | 900 m |
| Boom derricking (W2)<br>Wippwerk Hauptausleger (W2)<br>Variation de flèche (W2) | 28 mm | max. 120 m / min | | |
| Boom hoist (E)<br>Einziehwerk (E)<br>Relevage de flèche (E) | 30 mm | max. 52 m / min | | |
| Jib luffing (W1)<br>Wippwerk Hilfsausleger (W1)<br>Variation de volée (W1) | 28 mm | max. 120 m / min | | |
| Slewing (rpm)<br>Drehwerk (U/min)<br>Orientation (tr/mn) | | 0,7 | | |

1) top layer · oberste Lage · couche supérieure
2) without reeving effect considered · Angabe ohne Wirkungsgrad der Einscherung · sans effort de mouflage

### BASIC CRANE DIMENSIONS · HAUPTABMESSUNGEN · DIMENSIONS DE LA GRUE DE BASE

Basic crane dimensions with standard Superlift attachment · Hauptabmessungen mit serienmäßiger Superlifteinrichtung · Dimensions de la grue de base avec Superlift de série

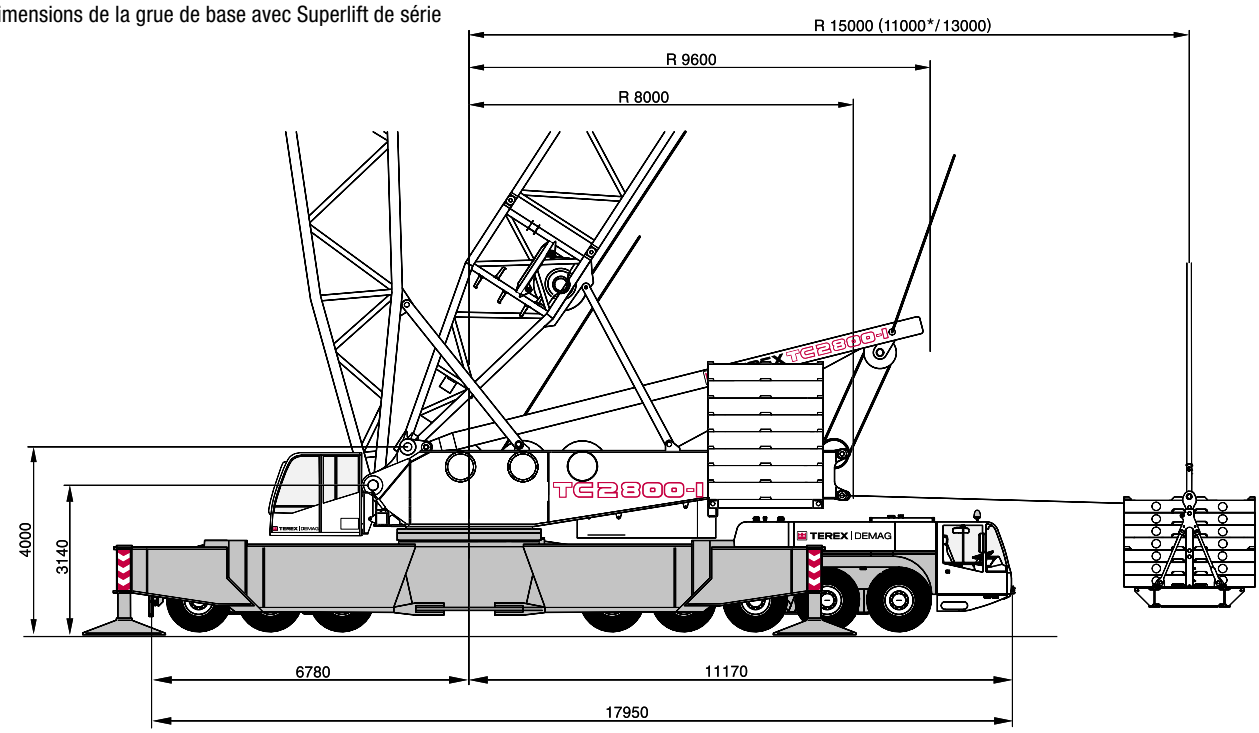


* Working range limited due to cabin and outriggers · Arbeitsbereich eingeschränkt durch Fahrerkabine und Stützen · Zone de fonction limité à la cabine et les stabilisateurs

## SPECIFICATIONS · TECHNISCHE DATEN · CARACTÉRISTIQUES

### HOOK BLOCKS · UNTERFLASCHEN · CROCHET-MOUFLE

| Type<br>Typ<br>Type | Possible load<br>Mögliche Traglast<br>Charge possible | Number of sheaves<br>Anzahl der Rollen<br>Nombre de poulies | Number of lines<br>Strangzahl<br>Nombre de brins | Weight<br>Gewicht<br>Poids | „D“ |
|---|---|---|---|---|---|
| 2 x 300 | 600 t<br>247 t | 2 x 11<br>11 | 2 x 22<br>17 | 10,4 t – 12,0 t<br>7,1 t – 7,9 t | 5,00 m<br>5,40 m |
| 2 x 200 | 400 t<br>196 t | 2 x 7<br>7 | 2 x 14<br>13 | 8,2 t – 10,0 t<br>5,3 t – 6,2 t | 5,00 m<br>5,40 m |
| 160 | 160 t | 5 | 11 | 3,3 t – 4,8 t | 4,30 m |
| 110 | 110 t | 3 | 7 | 1,9 t – 3,6 t | 4,30 m |
| 50 | 50 t | 1 | 3 | 2,8 t | 4,00 m |
| 16 | 16 t | — | 1 | 0,9 t | 3,00 m |

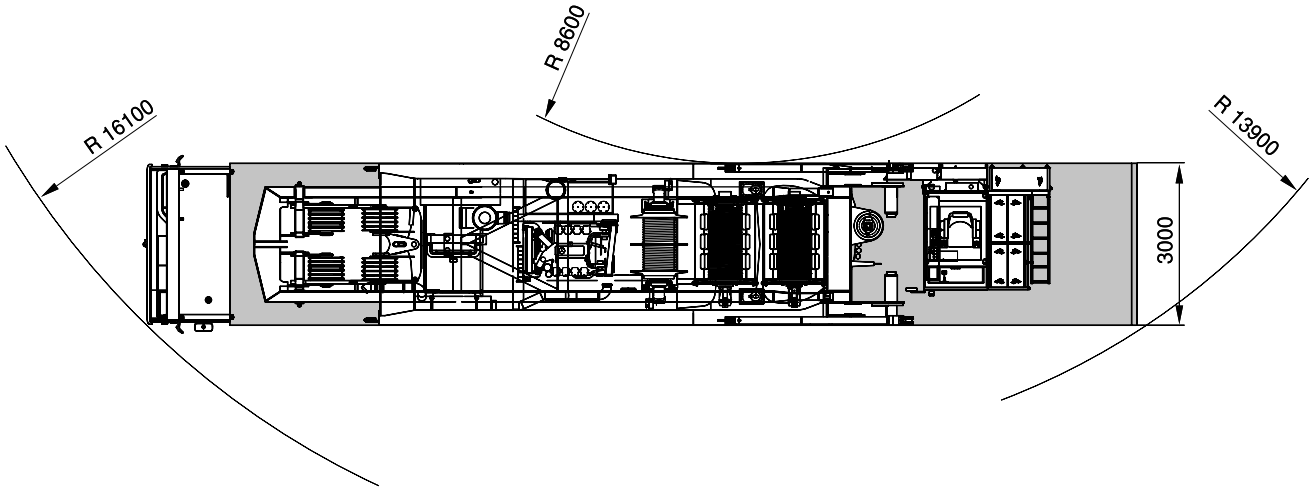


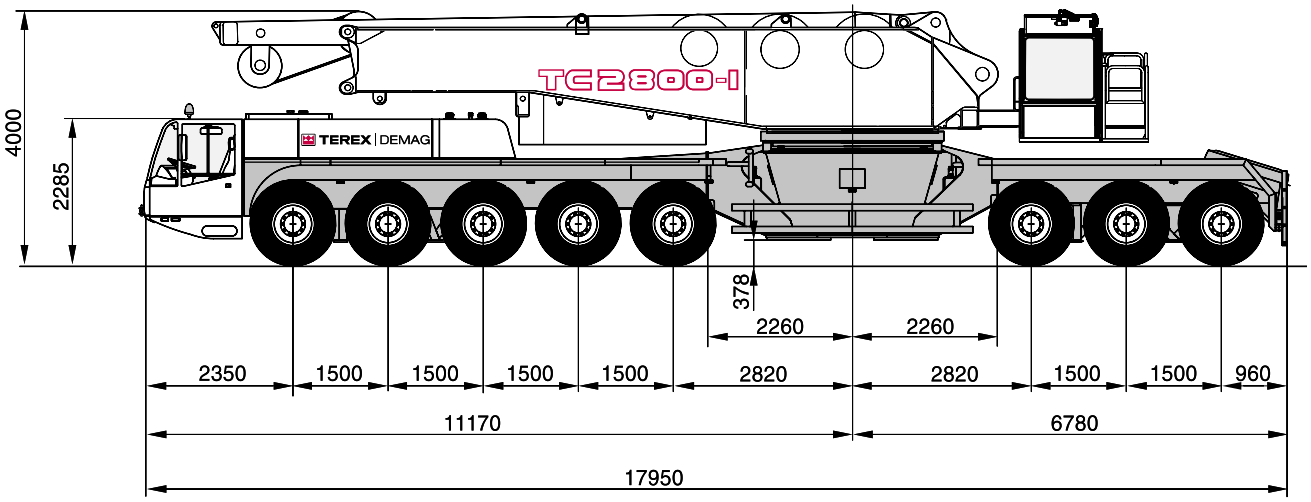

## SUPERLIFT CONFIGURATIONS · SUPERLIFT-KONFIGURATIONEN · COMBINAISONS SUPERLIFT

### STANDARD-SL 11 m*, 13 m, 15 m

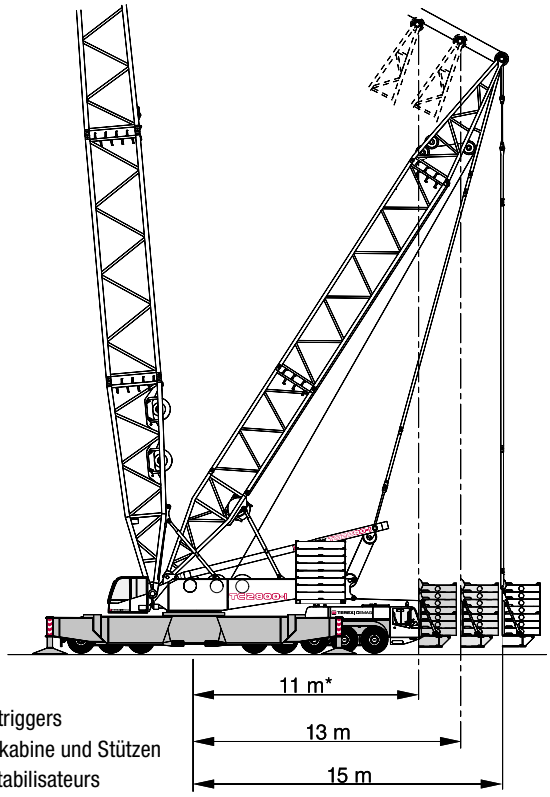


* Working range limited due to cabin and outriggers
* Arbeitsbereich eingeschränkt durch Fahrerkabine und Stützen
* Zone de fonction limité à la cabine et les stabilisateurs

### TELE-SL 13-17 m

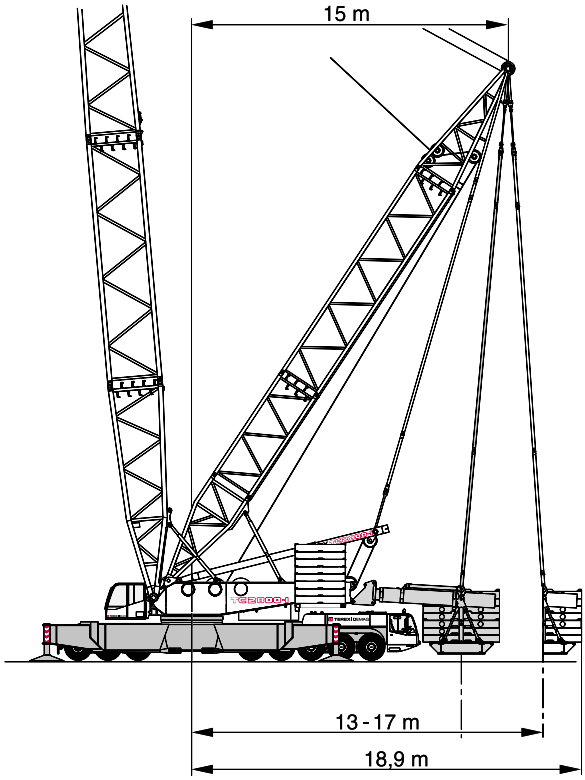

## SPECIFICATIONS · TECHNISCHE DATEN · CARACTÉRISTIQUES

### TRANSPORT · TRANSPORT · TRANSPORT

| | |
|---|---|
| Tyres<br>Bereifung<br>Pneumatiques | 14.00 R 25 |
| Travel speed<br>Fahrgeschwindigkeit<br>Vitesse sur route | 0 – 75 km/h |
| Gradeability<br>Steigfähigkeit<br>Capacité sur rampes | 43 % |
| Fuel tank capacity for carrier<br>Kraftstoffinhalt Unterwagen<br>Réservoir du carburant pour châssis | 970 l |
| Fuel tank capacity for superstructure<br>Kraftstoffinhalt Oberwagen<br>Réservoir du carburant pour partie supérieure | 500 l |

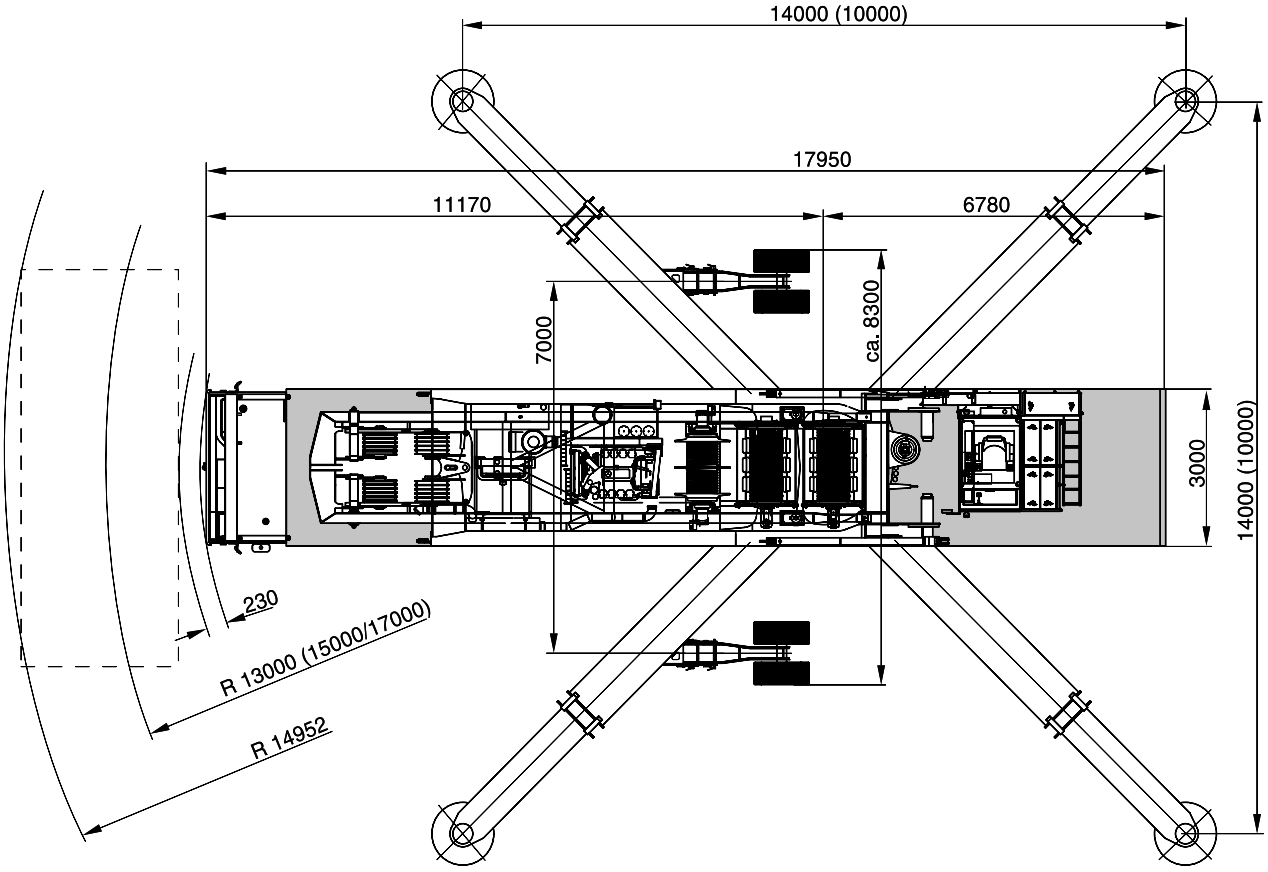

autovictor

## SPECIFICATIONS · TECHNISCHE DATEN · CARACTÉRISTIQUES

### TRANSPORT · TRANSPORT · TRANSPORT

Total weight:
Gesamtgewicht:
Poids total:
92,0 t

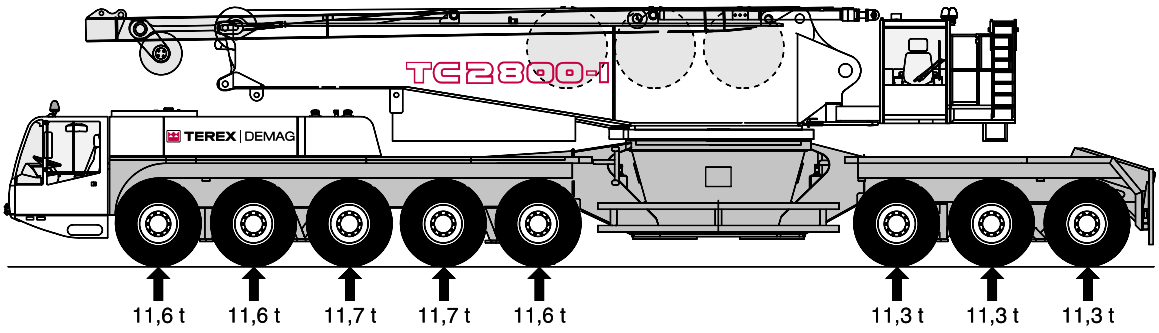


without winches H1+H2
ohne Winden H1+H2
sans tambours H1+H2

Total weight:
Gesamtgewicht:
Poids total:
80,8 t

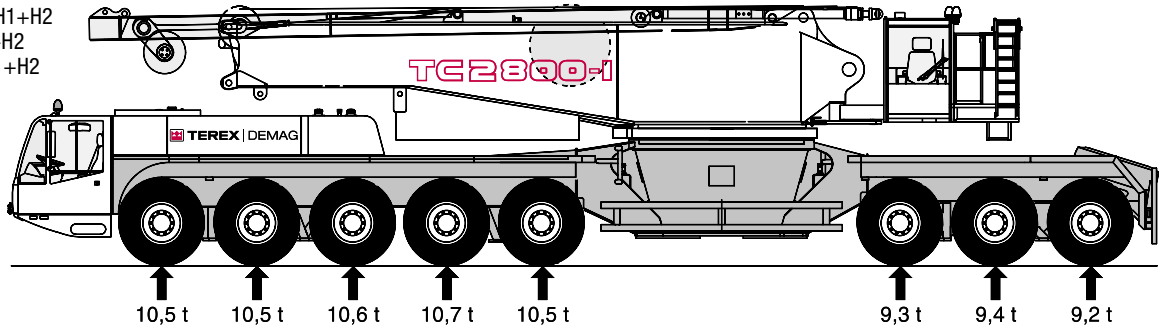


without winches H1+H2
without A-frame
ohne Winden H1+H2
ohne A-Bock
sans tambours H1+H2
sans chevalet

Total weight:
Gesamtgewicht:
Poids total:
77,0 t

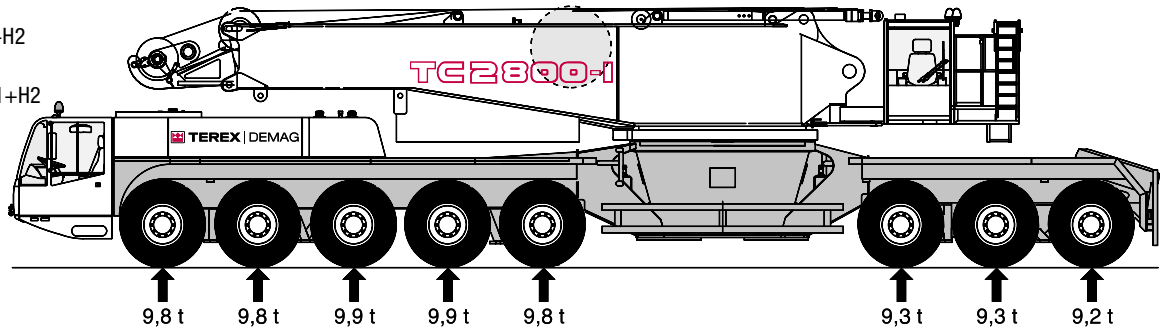


Total weight:
Gesamtgewicht:
Poids total:
36,6 t*

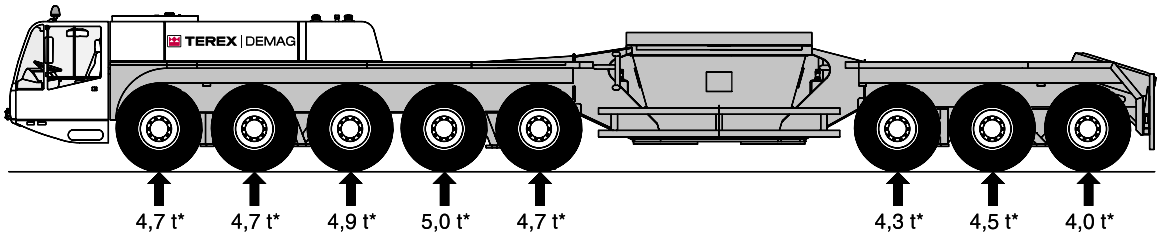


* With quick-connection. Height with superstructure and quick connection 4.20 m.
* Mit Schnellverbindung. Höhe mit Oberwagen und Schnellverbindung 4,20 m.
* Avec connexion rapide. Hauteur avec partie supérieure et connexion rapide 4,20 m.

autovictor

## SPECIFICATIONS · TECHNISCHE DATEN · CARACTÉRISTIQUES

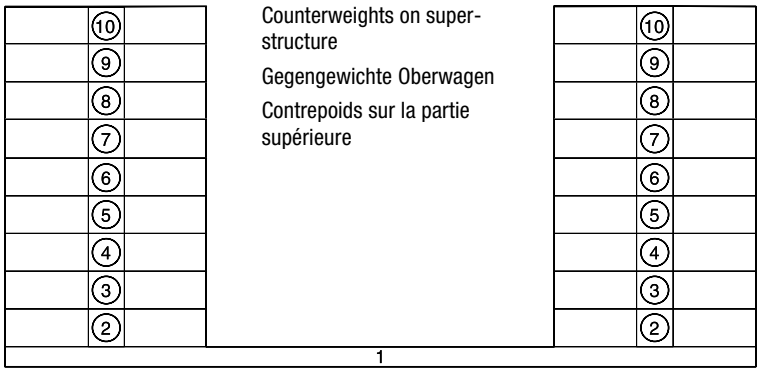


Counterweights on superstructure

Gegengewichte Oberwagen

Contrepoids sur la partie supérieure

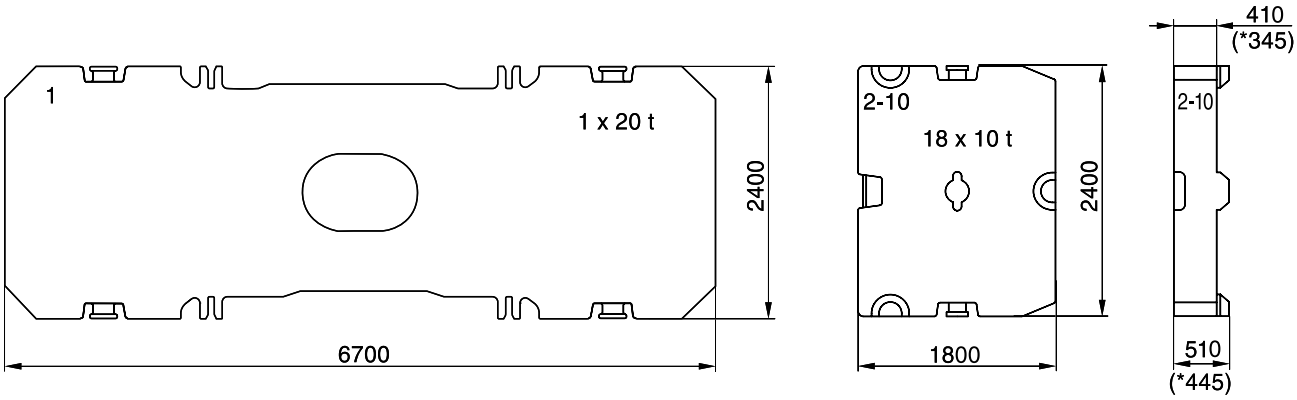


* optional · Option · option

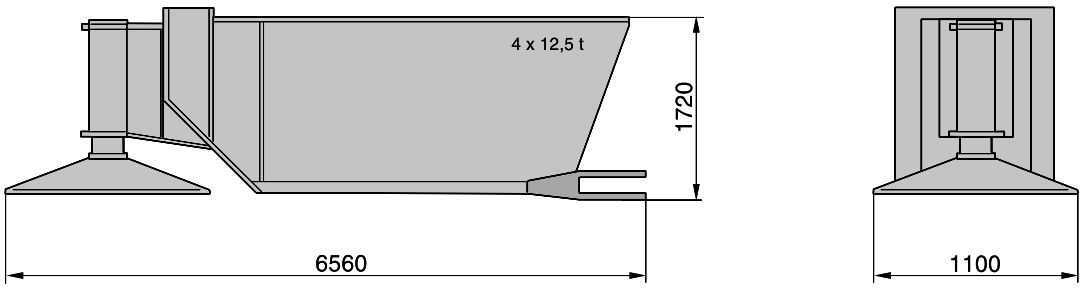


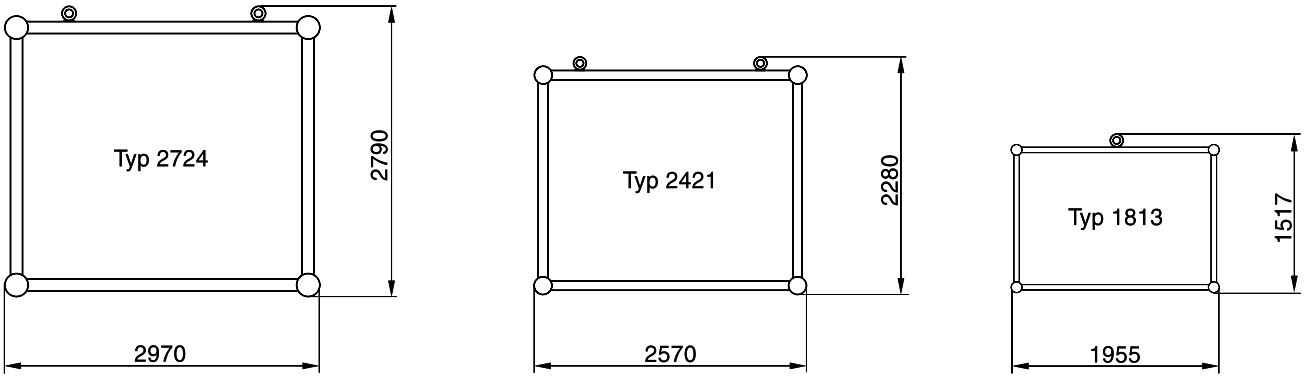

autovictor

## SPECIFICATIONS · TECHNISCHE DATEN · CARACTÉRISTIQUES

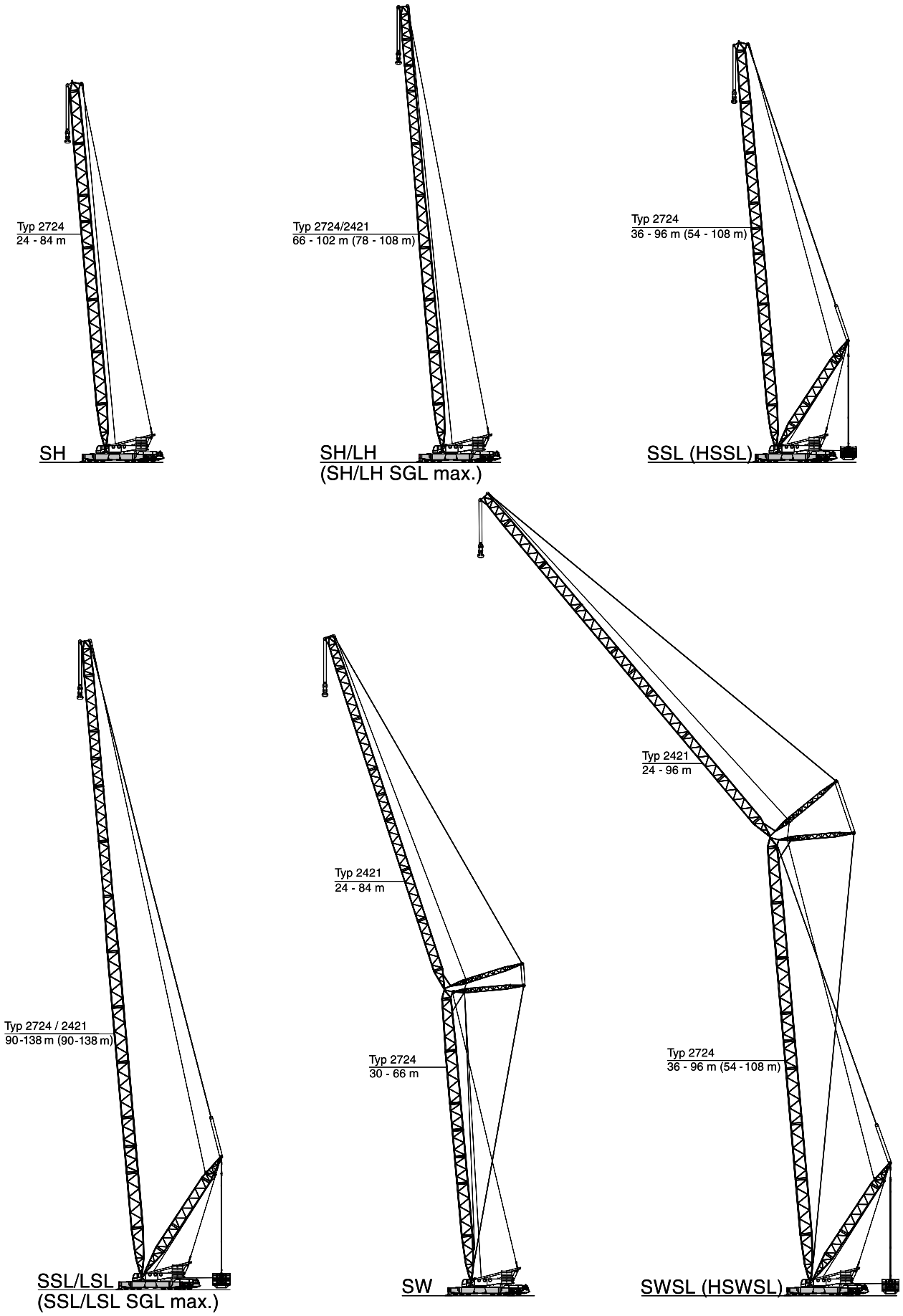

autovictor

## SPECIFICATIONS · TECHNISCHE DATEN · CARACTÉRISTIQUES

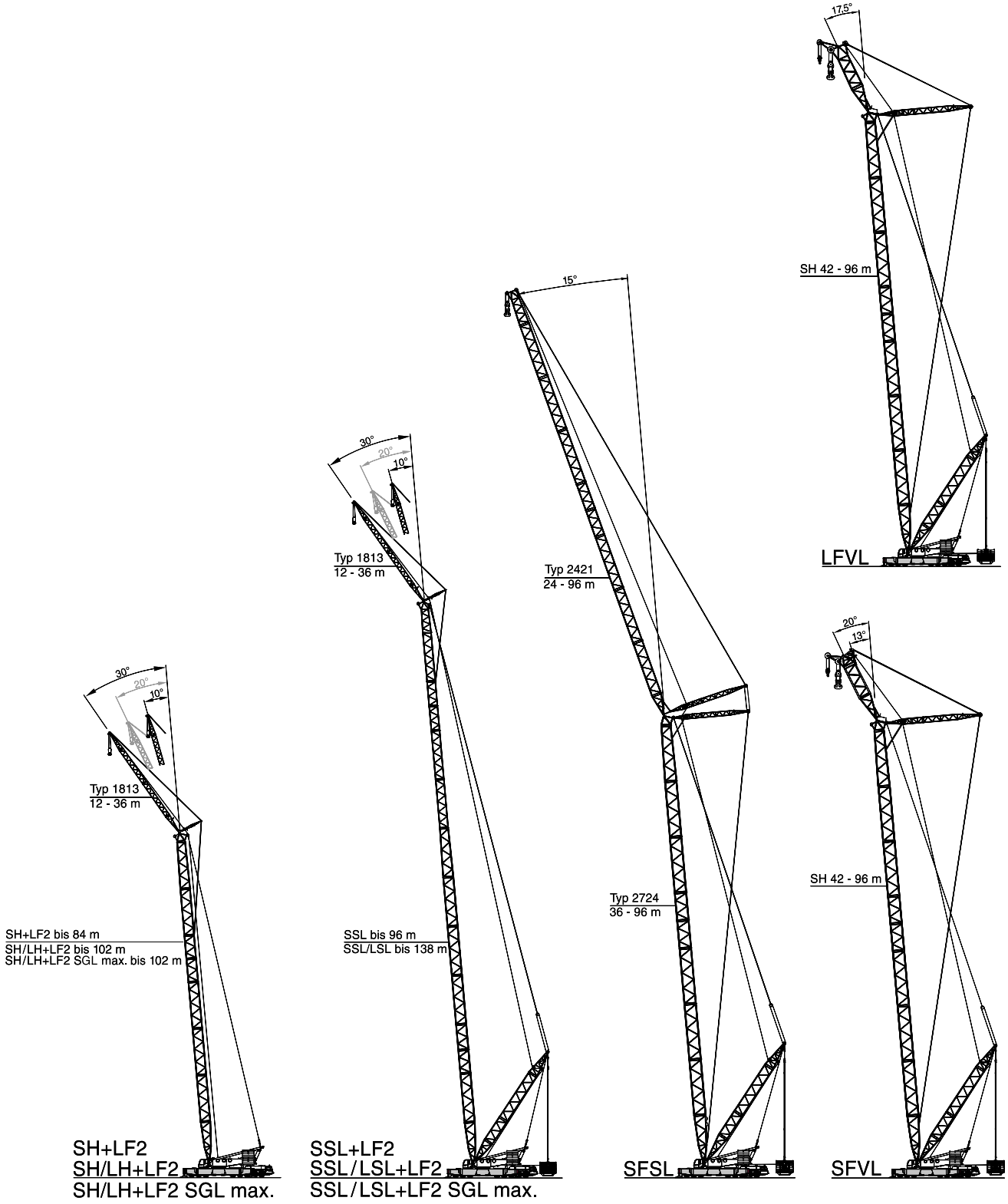


SFVL: Configuration with 600 t heavy-duty head
Ausführung mit 600 t Schwerlastkopf
Configuration avec tête de la flèche poids-lourd de 600 t

LFVL: Fitted with 300 t jib top section
Ausführung mit 300 t Hilfsauslegerspitze
Equipée avec tête de la fléchette de 300 t

Special combinations available on request!
Sonder-Kombinationen auf Anfrage!
Combinaisons specials sur demande!

autovictor

## ERECTION / LOWERING OF THE TC 2800-1 BOOM SYSTEMS TO THE GROUND
## AUFRICHTEN / ABLEGEN DER TC 2800-1 AUSLEGERSYSTEME
## MONTÉE / PLACEMENT SUR SOL DES SYSTÈMES DE FLÈCHE DE LA TC 2800-1

160-200 t · 11-15 m · 14 m x 14 m

| Boom combination<br>Auslegervariante<br>Combinaison de flèche | Fly jib<br>Hilfsausleger<br>Fléchette (m) | Main boom · Hauptausleger · Flèche principale | | | | | | | | | | | | | | | | | | | |
|---|---|---|---|---|---|---|---|---|---|---|---|---|---|---|---|---|---|---|---|---|---|
| | m | 24 | 30 | 36 | 42 | 48 | 54 | 60 | 66 | 72 | 78 | 84 | 90 | 96 | 102 | 108 | 114 | 120 | 126 | 132 | 138 |
| **SH** | | X | X | X | X | X | X | X | X | X | X | X | – | – | – | – | – | – | – | – | – |
| **SH/LH** | | – | – | – | – | – | – | – | X | X | X | X | X | X | (X) | – | – | – | – | – | – |
| **SH/LH SGLmax.** | | – | – | – | – | – | – | – | – | – | X | X | X | X | (X) | – | – | – | – | – | – |
| **SW** | 24 | – | X | X | X | X | X | X | [X] | – | – | – | – | – | – | – | – | – | – | – | – |
| | 30 | – | X | X | X | X | X | X | [X] | – | – | – | – | – | – | – | – | – | – | – | – |
| | 36 | – | X | X | X | X | X | X | [X] | – | – | – | – | – | – | – | – | – | – | – | – |
| | 42 | – | X | X | X | X | X | X | X | – | – | – | – | – | – | – | – | – | – | – | – |
| | 48 | – | X | X | X | X | X | X | X | – | – | – | – | – | – | – | – | – | – | – | – |
| | 54 | – | X | X | X | X | X | X | X | – | – | – | – | – | – | – | – | – | – | – | – |
| | 60 | – | X | X | X | X | X | X | X | – | – | – | – | – | – | – | – | – | – | – | – |
| | 66 | – | X | X | X | X | X | X | X | – | – | – | – | – | – | – | – | – | – | – | – |
| | 72 | – | X | X | X | X | X | X | (X) | – | – | – | – | – | – | – | – | – | – | – | – |
| | 78 | – | X | X | X | X | X | X | [X] | – | – | – | – | – | – | – | – | – | – | – | – |
| | 84 | – | X | X | X | X | X | X | [X] | – | – | – | – | – | – | – | – | – | – | – | – |
| **SH+LF2** | 12 | – | X | X | X | X | X | X | X | X | X | X | – | – | – | – | – | – | – | – | – |
| **SH/LH+LF2** | 12 | – | – | – | – | – | – | – | X | X | X | X | X | X | (X) | – | – | – | – | – | – |
| **SH/LH SGLmax. +LF2** | 12 | – | – | – | – | – | – | – | – | – | X | X | X | [X] | [X] | – | – | – | – | – | – |
| **SSL** | | – | – | 0 | 0 | 0 | 0 | 0 | 0 | 0 | 0 | 5 | 25 | 45 | – | – | – | – | – | – | – |
| **HSSL** | | – | – | – | – | – | 0 | 0 | 0 | 0 | 0 | 10 | 15 | 35 | 55 | 70 | – | – | – | – | – |
| **SSL / LSL** | | – | – | – | – | – | – | – | – | – | – | – | 5 | 20 | 30 | 50 | 65 | 80 | 100 | 105 | 125 |
| **SSL/LSL SGLmax.** | | – | – | – | – | – | – | – | – | – | – | – | 0 | 10 | 30 | 45 | 65 | 80 | 100 | 105 | 125 |
| **LFVL** | | – | – | – | 0 | 0 | 0 | 0 | 5 | 25 | 50 | 65 | 90 | 115 | – | – | – | – | – | – | – |
| **SFVL** | | – | – | – | 0 | 0 | 0 | 10 | 20 | 45 | 85 | 85 | 110 | 140 | – | – | – | – | – | – | – |
| **SWSL / SFSL** | 24 | – | – | 0 | 0 | 0 | 0 | 5 | 30 | 50 | 65 | 90 | 115 | 145 | – | – | – | – | – | – | – |
| | 30 | – | – | 0 | 0 | 0 | 0 | 5 | 25 | 55 | 80 | 95 | 125 | 155 | – | – | – | – | – | – | – |
| | 36 | – | – | 0 | 0 | 0 | 0 | 0 | 25 | 55 | 80 | 110 | 130 | 160 | – | – | – | – | – | – | – |
| | 42 | – | – | 0 | 0 | 0 | 0 | 0 | 20 | 50 | 80 | 105 | 135 | 165 | – | – | – | – | – | – | – |
| | 48 | – | – | 0 | 0 | 0 | 0 | 0 | 15 | 45 | 70 | 100 | 135 | 165 | – | – | – | – | – | – | – |
| | 54 | – | – | 0 | 0 | 0 | 0 | 0 | 5 | 30 | 65 | 100 | 130 | 165 | – | – | – | – | – | – | – |
| | 60 | – | – | 0 | 0 | 0 | 0 | 0 | 5 | 30 | 55 | 90 | 125 | 160 | – | – | – | – | – | – | – |
| | 66 | – | – | 0 | 0 | 0 | 0 | 0 | 10 | 35 | 55 | 90 | 110 | 150 | – | – | – | – | – | – | – |
| | 72 | – | – | 0 | 0 | 0 | 0 | 0 | 15 | 40 | 60 | 85 | 110 | 140 | – | – | – | – | – | – | – |
| | 78 | – | – | 0 | 0 | 0 | 0 | 0 | 20 | 40 | 65 | 90 | 115 | 145 | – | – | – | – | – | – | – |
| | 84 | – | – | 0 | 0 | 0 | 0 | 0 | 20 | 45 | 70 | 95 | 120 | 150 | – | – | – | – | – | – | – |
| | 90 | – | – | 0 | 0 | 0 | 0 | 5 | 25 | 50 | 75 | 100 | 125 | 155 | – | – | – | – | – | – | – |
| | 96 | – | – | 0 | 0 | 0 | 0 | 5 | 30 | 55 | 75 | 105 | 130 | 160 | – | – | – | – | – | – | – |
| **SSL+LF2** | 12 | – | – | 0 | 0 | 0 | 0 | 0 | 0 | 0 | 15 | 35 | 55 | 80 | – | – | – | – | – | – | – |
| **HSSL+LF2** | 12 | – | – | – | – | – | 0 | 0 | 0 | 0 | 0 | 0 | 10 | 30 | 50 | 70 | – | – | – | – | – |
| **SSL / LSL+LF2** | 12 | – | – | – | – | – | – | – | – | – | – | – | 45 | 60 | 75 | 95 | 115 | 135 | 155 | 185 | 195 |
| **SSL/LSL SGLmax. +LF2** | 12 | – | – | – | – | – | – | – | – | – | 0 | 0 | 5 | 20 | 40 | 65 | 90 | 110 | 130 | 160 | 190 |

**Remarks · Bemerkungen · Remarques**

X no limitations · ohne Einschränkungen · sans restrictions

(X) erecting to the rear · Aufrichten über die Hinterkante · montée vers l'arrière

[X] with assist crane · mit Hilfskran · avec grue auxiliaire

Values for LF with 10° jib offset; values may differ for other offsets · Werte für LF mit 10° Vorneigung; für andere Vorneigungen ergeben sich geringfügige Abweichungen · Valeurs LF avec inclinaison 10 degrés, pour d'autres inclinaisons de petites différences sont possibles.

All Superlift combinations can be erected or lowered to the ground without assisting equipment. The stated numbers represent the necessary SL-counterweight in [t]. · Alle Varianten mit Superlift können ohne Zusatzausrüstung aufgerichtet bzw. abgelegt werden. Die angegebenen Zahlenwerte entsprechen dem notwendigen SL-Ballast in [t]. · Montée et dépose sur sol de toutes les combinaisons avec SL sans équipement aditionnel. Les valeurs indiquées correspondent au balast superlift [en to.] necéssaire.

# SH, SH/LH WORKING RANGES · ARBEITSBEREICHE · PORTÉES

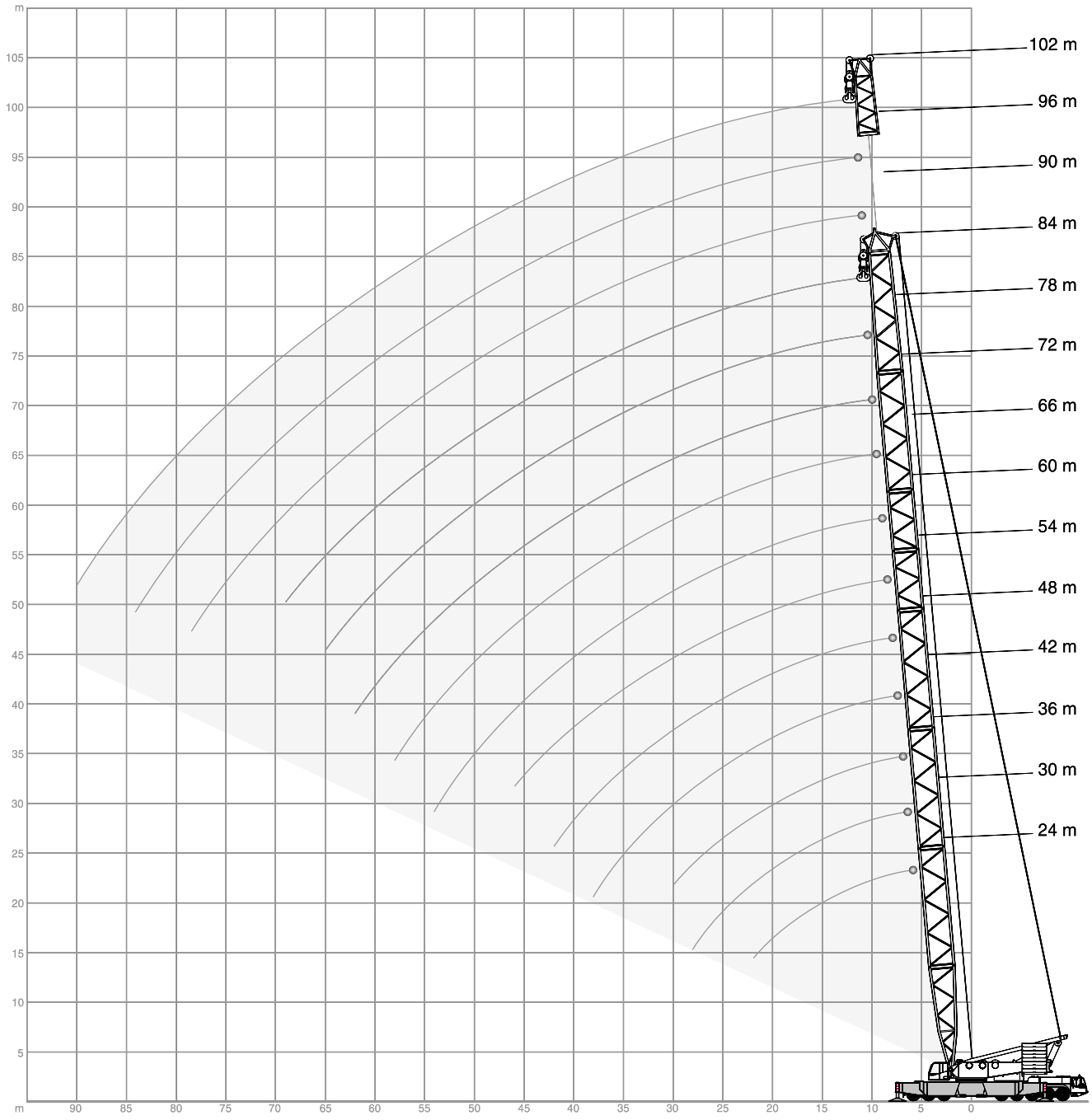

autovictor

# SH LIFTING CAPACITIES · TRAGFÄHIGKEITEN · CAPACITÉS DE LEVAGE

**200 t** | 14 m x 14 m | 360° | DIN/ISO

| m | 24,0 m | 30,0 m | 36,0 m | 42,0 m | 48,0 m | 54,0 m | 60,0 m | 66,0 m | 72,0 m | 78,0 m | 84,0 m | m |
|---|---|---|---|---|---|---|---|---|---|---|---|---|
| | t | t | t | t | t | t | t | t | t | t | t | |
| 6 | 600,0 | - | - | - | - | - | - | - | - | - | - | 6 |
| 7 | 552,0 | 549,0 | 545,0 | - | - | - | - | - | - | - | - | 7 |
| 8 | 508,0 | 505,0 | 501,0 | 498,0 | 495,0 | - | - | - | - | - | - | 8 |
| 9 | 461,0 | 457,0 | 454,0 | 451,0 | 449,0 | 447,0 | 415,0 | - | - | - | - | 9 |
| 10 | 414,0 | 411,0 | 408,0 | 405,0 | 403,0 | 401,0 | 393,0 | 343,0 | 301,0 | - | - | 10 |
| 12 | 337,0 | 334,0 | 332,0 | 329,0 | 327,0 | 325,0 | 324,0 | 315,0 | 278,0 | 256,0 | 212,0 | 12 |
| 14 | 284,0 | 281,0 | 278,0 | 276,0 | 274,0 | 272,0 | 270,0 | 269,0 | 262,0 | 215,0 | 210,0 | 14 |
| 16 | 245,0 | 242,0 | 239,0 | 237,0 | 234,0 | 232,0 | 231,0 | 229,0 | 228,0 | 200,0 | 177,0 | 16 |
| 18 | 214,0 | 210,0 | 207,0 | 204,0 | 201,0 | 199,0 | 198,0 | 196,0 | 195,0 | 185,0 | 164,0 | 18 |
| 20 | 187,0 | 186,0 | 181,0 | 178,0 | 176,0 | 174,0 | 172,0 | 170,0 | 169,0 | 166,0 | 152,0 | 20 |
| 22 | 161,0 | 159,0 | 157,0 | 155,0 | 154,0 | 153,0 | 152,0 | 150,0 | 148,0 | 147,0 | 142,0 | 22 |
| 24 | - | 139,0 | 137,0 | 135,0 | 133,0 | 133,0 | 132,0 | 131,0 | 130,0 | 130,0 | 127,0 | 24 |
| 26 | - | 123,0 | 121,0 | 119,0 | 117,0 | 116,0 | 115,0 | 114,0 | 114,0 | 113,0 | 111,0 | 26 |
| 28 | - | 110,0 | 108,0 | 106,0 | 104,0 | 103,0 | 102,0 | 101,0 | 100,0 | 99,5 | 98,0 | 28 |
| 30 | - | - | 97,0 | 95,0 | 93,5 | 92,5 | 91,5 | 90,5 | 89,5 | 88,5 | 87,0 | 30 |
| 34 | - | - | - | 78,5 | 76,5 | 75,5 | 74,5 | 73,5 | 72,5 | 71,5 | 70,0 | 34 |
| 38 | - | - | - | 66,5 | 64,5 | 63,0 | 62,0 | 60,5 | 59,5 | 59,0 | 57,0 | 38 |
| 42 | - | - | - | - | 55,5 | 53,5 | 52,5 | 51,0 | 50,0 | 49,2 | 47,4 | 42 |
| 46 | - | - | - | - | - | 46,6 | 45,0 | 43,7 | 42,5 | 41,2 | 39,2 | 46 |
| 50 | - | - | - | - | - | - | 39,1 | 37,5 | 36,0 | 34,7 | 32,6 | 50 |
| 54 | - | - | - | - | - | - | 34,2 | 32,4 | 30,7 | 29,3 | 27,2 | 54 |
| 58 | - | - | - | - | - | - | - | 28,2 | 26,3 | 24,8 | 22,7 | 58 |
| 62 | - | - | - | - | - | - | - | - | 22,7 | 21,1 | 18,9 | 62 |
| 66 | - | - | - | - | - | - | - | - | - | 18,0 | 15,7 | 66 |
| 70 | - | - | - | - | - | - | - | - | - | 15,5 | 13,0 | 70 |
| 74 | - | - | - | - | - | - | - | - | - | - | 10,8 | 74 |
| 78 | - | - | - | - | - | - | - | - | - | - | - | 78 |

**160 t** | 14 m x 14 m | 360° | DIN/ISO

| m | 24,0 m | 30,0 m | 36,0 m | 42,0 m | 48,0 m | 54,0 m | 60,0 m | 66,0 m | 72,0 m | 78,0 m | 84,0 m | m |
|---|---|---|---|---|---|---|---|---|---|---|---|---|
| | t | t | t | t | t | t | t | t | t | t | t | |
| 6 | 600,0 | - | - | - | - | - | - | - | - | - | - | 6 |
| 7 | 549,0 | 545,0 | 542,0 | - | - | - | - | - | - | - | - | 7 |
| 8 | 496,0 | 493,0 | 490,0 | 487,0 | 484,0 | - | - | - | - | - | - | 8 |
| 9 | 440,0 | 437,0 | 434,0 | 431,0 | 429,0 | 427,0 | 415,0 | - | - | - | - | 9 |
| 10 | 391,0 | 388,0 | 385,0 | 382,0 | 380,0 | 378,0 | 377,0 | 343,0 | 301,0 | - | - | 10 |
| 12 | 318,0 | 316,0 | 313,0 | 310,0 | 308,0 | 306,0 | 305,0 | 290,0 | 276,0 | 256,0 | 212,0 | 12 |
| 14 | 268,0 | 265,0 | 262,0 | 260,0 | 258,0 | 256,0 | 247,0 | 237,0 | 227,0 | 215,0 | 208,0 | 14 |
| 16 | 231,0 | 228,0 | 225,0 | 223,0 | 220,0 | 215,0 | 207,0 | 199,0 | 191,0 | 184,0 | 177,0 | 16 |
| 18 | 189,0 | 187,0 | 186,0 | 184,0 | 183,0 | 183,0 | 177,0 | 170,0 | 164,0 | 158,0 | 152,0 | 18 |
| 20 | 158,0 | 156,0 | 155,0 | 153,0 | 152,0 | 151,0 | 150,0 | 148,0 | 143,0 | 138,0 | 133,0 | 20 |
| 22 | 135,0 | 133,0 | 132,0 | 130,0 | 129,0 | 128,0 | 127,0 | 126,0 | 126,0 | 122,0 | 118,0 | 22 |
| 24 | - | 116,0 | 114,0 | 112,0 | 111,0 | 110,0 | 109,0 | 108,0 | 108,0 | 107,0 | 105,0 | 24 |
| 26 | - | 102,0 | 100,0 | 98,5 | 97,0 | 96,0 | 95,5 | 94,5 | 93,5 | 93,0 | 91,5 | 26 |
| 28 | - | 92,0 | 89,5 | 87,5 | 86,0 | 85,0 | 84,0 | 83,0 | 82,0 | 81,5 | 80,0 | 28 |
| 30 | - | - | 80,5 | 78,5 | 76,5 | 75,5 | 74,5 | 73,5 | 73,0 | 72,0 | 70,5 | 30 |
| 34 | - | - | - | 64,5 | 62,5 | 61,0 | 60,0 | 59,0 | 58,0 | 57,0 | 55,5 | 34 |
| 38 | - | - | - | 54,0 | 52,0 | 50,5 | 49,6 | 48,5 | 47,5 | 46,6 | 44,6 | 38 |
| 42 | - | - | - | - | 44,6 | 42,9 | 41,5 | 40,2 | 38,9 | 37,7 | 35,7 | 42 |
| 46 | - | - | - | - | - | 36,7 | 34,9 | 33,4 | 32,0 | 30,8 | 28,7 | 46 |
| 50 | - | - | - | - | - | - | 29,7 | 28,0 | 26,5 | 25,2 | 23,1 | 50 |
| 54 | - | - | - | - | - | - | 25,5 | 23,7 | 22,0 | 20,6 | 18,5 | 54 |
| 58 | - | - | - | - | - | - | - | 20,2 | 18,3 | 16,8 | 14,6 | 58 |
| 62 | - | - | - | - | - | - | - | - | 15,3 | 13,7 | 11,4 | 62 |
| 66 | - | - | - | - | - | - | - | - | - | 11,1 | 8,8 | 66 |
| 70 | - | - | - | - | - | - | - | - | - | 9,0 | 6,6 | 70 |

# SH/LH LIFTING CAPACITIES · TRAGFÄHIGKEITEN · CAPACITÉS DE LEVAGE

14 m x 14 m | 360° | DIN/ISO

| | 66 m | | | 72 m | | | 78 m | | | 84 m | | |
|---|---|---|---|---|---|---|---|---|---|---|---|---|
| | SH/LH | | SH/LH SGLmax. | SH/LH | | SH/LH SGLmax. | SH/LH | | SH/LH SGLmax. | SH/LH | | SH/LH SGLmax. |
| | 160 t | 200 t | | 160 t | 200 t | | 160 t | 200 t | | 160 t | 200 t | |
| m | t | t | t | t | t | t | t | t | t | t | t | t |
| 9 | 298,0 | 298,0 | - | - | - | - | - | - | - | - | - | - |
| 10 | 298,0 | 298,0 | - | 268,0 | 268,0 | - | 202,0 | 202,0 | 222,0 | - | - | - |
| 11 | 290,5 | 290,5 | - | 268,0 | 268,0 | - | 202,0 | 202,0 | 222,0 | - | - | 215,0 |
| 12 | 283,0 | 283,0 | - | 268,0 | 268,0 | - | 202,0 | 202,0 | 222,0 | 169,0 | 169,0 | 215,0 |
| 14 | 236,0 | 236,0 | - | 220,0 | 220,0 | - | 178,0 | 178,0 | 193,0 | 150,0 | 150,0 | 204,0 |
| 16 | 202,0 | 209,0 | - | 193,0 | 193,0 | - | 158,0 | 158,0 | 167,0 | 133,0 | 133,0 | 184,0 |
| 18 | 174,0 | 184,0 | - | 168,0 | 170,0 | - | 140,0 | 140,0 | 145,0 | 119,0 | 119,0 | 166,0 |
| 20 | 152,0 | 162,0 | - | 148,0 | 150,0 | - | 125,0 | 125,0 | 127,0 | 107,0 | 107,0 | 149,0 |
| 22 | 132,0 | 145,0 | - | 131,0 | 134,0 | - | 112,0 | 112,0 | 112,0 | 96,0 | 96,0 | 134,0 |
| 24 | 114,0 | 134,0 | - | 114,0 | 123,0 | - | 102,0 | 102,0 | 101,0 | 87,0 | 87,0 | 120,0 |
| 26 | 100,0 | 120,0 | - | 100,0 | 114,0 | - | 95,0 | 95,0 | 95,0 | 80,0 | 80,0 | 107,0 |
| 28 | 89,0 | 107,0 | - | 89,0 | 105,0 | - | 88,0 | 88,0 | 89,5 | 73,0 | 73,0 | 99,5 |
| 30 | 79,5 | 96,5 | - | 79,5 | 96,0 | - | 79,0 | 81,5 | 84,0 | 67,5 | 67,5 | 94,0 |
| 34 | 65,0 | 79,0 | - | 64,5 | 79,0 | - | 64,5 | 69,5 | 72,5 | 58,0 | 58,0 | 76,5 |
| 38 | 54,0 | 66,5 | - | 54,0 | 66,0 | - | 53,5 | 60,0 | 61,5 | 49,4 | 49,4 | 63,5 |
| 42 | 46,0 | 57,0 | - | 45,6 | 56,5 | - | 45,2 | 51,0 | 50,0 | 41,5 | 41,5 | 54,0 |
| 46 | 39,4 | 49,3 | - | 39,0 | 48,8 | - | 38,6 | 45,0 | 41,2 | 35,0 | 35,0 | 46,1 |
| 50 | 34,1 | 43,0 | - | 33,6 | 42,0 | - | 33,1 | 39,0 | 37,3 | 31,0 | 31,0 | 39,8 |
| 54 | 29,7 | 38,0 | - | 29,0 | 37,0 | - | 28,4 | 34,0 | 33,4 | 27,0 | 27,0 | 34,3 |
| 58 | 25,9 | 33,8 | - | 25,2 | 33,0 | - | 24,5 | 30,0 | 29,5 | 23,4 | 25,0 | 29,6 |
| 62 | - | - | - | 21,9 | 29,0 | - | 21,2 | 26,0 | 25,6 | 20,0 | 22,0 | 25,6 |
| 66 | - | - | - | - | - | - | 18,4 | 22,0 | 21,7 | 17,2 | 19,0 | 22,3 |
| 70 | - | - | - | - | - | - | 16,0 | 18,0 | 17,8 | 14,7 | 16,0 | 19,4 |
| 74 | - | - | - | - | - | - | - | - | - | 12,0 | 12,0 | 16,9 |
| 75 | - | - | - | - | - | - | - | - | - | - | - | 16,3 |

| | 90 m | | | 96 m | | | 102 m | | |
|---|---|---|---|---|---|---|---|---|---|
| | SH/LH | | SH/LH SGLmax. | SH/LH | | SH/LH SGLmax. | SH/LH | | SH/LH SGLmax. |
| | 160 t | 200 t | | 160 t | 200 t | | 160 t | 200 t | |
| m | t | t | t | t | t | t | t | t | t |
| 12 | 154,0 | 154,0 | 202,0 | 137,0 | 137,0 | 159,0 | - | - | - |
| 13 | 154,0 | 154,0 | 197,0 | 137,0 | 137,0 | 159,0 | - | - | 145,0 |
| 14 | 154,0 | 154,0 | 192,0 | 137,0 | 137,0 | 159,0 | 108,0 | 108,0 | 145,0 |
| 16 | 142,0 | 142,0 | 172,0 | 127,0 | 127,0 | 150,0 | 103,0 | 103,0 | 140,0 |
| 18 | 131,0 | 131,0 | 154,0 | 118,0 | 118,0 | 140,0 | 98,5 | 98,5 | 130,0 |
| 20 | 123,0 | 123,0 | 138,0 | 110,0 | 110,0 | 131,0 | 93,5 | 93,5 | 120,0 |
| 22 | 115,0 | 115,0 | 123,0 | 104,0 | 104,0 | 122,0 | 89,0 | 89,0 | 111,0 |
| 24 | 108,0 | 109,0 | 111,0 | 98,0 | 98,0 | 112,0 | 84,5 | 84,5 | 102,0 |
| 26 | 97,5 | 103,0 | 100,0 | 93,0 | 93,0 | 101,0 | 80,0 | 80,0 | 94,0 |
| 28 | 87,5 | 97,0 | 90,5 | 86,0 | 89,0 | 92,5 | 75,5 | 75,5 | 86,0 |
| 30 | 78,0 | 92,0 | 85,0 | 77,5 | 84,0 | 83,5 | 71,5 | 71,5 | 78,0 |
| 34 | 63,0 | 77,0 | 75,5 | 62,5 | 76,0 | 68,0 | 62,5 | 64,0 | 66,5 |
| 38 | 52,0 | 64,5 | 62,5 | 51,5 | 63,0 | 55,5 | 51,0 | 57,5 | 60,0 |
| 42 | 43,8 | 54,5 | 52,5 | 43,3 | 54,0 | 45,6 | 42,9 | 51,5 | 51,0 |
| 46 | 37,1 | 47,0 | 44,9 | 36,5 | 46,4 | 38,5 | 36,0 | 45,6 | 43,2 |
| 50 | 31,4 | 40,6 | 38,4 | 30,6 | 40,0 | 34,1 | 30,1 | 39,6 | 36,3 |
| 54 | 26,6 | 35,3 | 32,8 | 25,8 | 34,5 | 32,0 | 25,3 | 34,0 | 30,6 |
| 58 | 22,6 | 30,6 | 28,0 | 21,8 | 29,8 | 27,3 | 21,2 | 29,3 | 25,9 |
| 62 | 19,2 | 26,6 | 24,1 | 18,4 | 25,8 | 23,2 | 17,8 | 25,2 | 21,8 |
| 66 | 16,3 | 23,2 | 20,6 | 15,5 | 22,4 | 19,8 | 14,8 | 21,8 | 18,3 |
| 70 | 13,8 | 20,3 | 17,7 | 12,9 | 19,4 | 16,8 | 12,3 | 18,6 | 15,3 |
| 74 | 11,7 | 17,8 | 15,1 | 10,8 | 16,9 | 14,2 | 10,1 | 15,5 | 12,7 |
| 78 | 9,8 | 15,5 | 12,9 | 8,8 | 14,6 | 11,9 | 8,1 | 12,7 | 10,4 |
| 80 | - | - | 11,9 | 8,0 | 13,6 | 10,9 | 7,2 | 11,5 | 9,3 |
| 82 | - | - | - | 7,2 | 12,6 | 10,0 | 6,4 | 10,4 | 8,3 |
| 85 | - | - | - | - | - | 8,6 | 5,2 | 8,9 | 6,9 |
| 86 | - | - | - | - | - | - | 4,9 | 8,4 | 6,5 |
| 87 | - | - | - | - | - | - | - | 8,0 | 6,1 |
| 90 | - | - | - | - | - | - | - | 6,8 | 5,0 |

**Remarks · Bemerkungen · Remarques**

For SH/LH SGLmax. a boom power-kit is required · Für SH/LH SGLmax. ist ein Ausleger-Verstärkungs-Kit erforderlich · Un kit à fortifier de flèche principale est nécessaire pour SH/LH SGLmax.

# SSL /HSSL, SSL/LSL WORKING RANGES · ARBEITSBEREICHE · PORTÉES

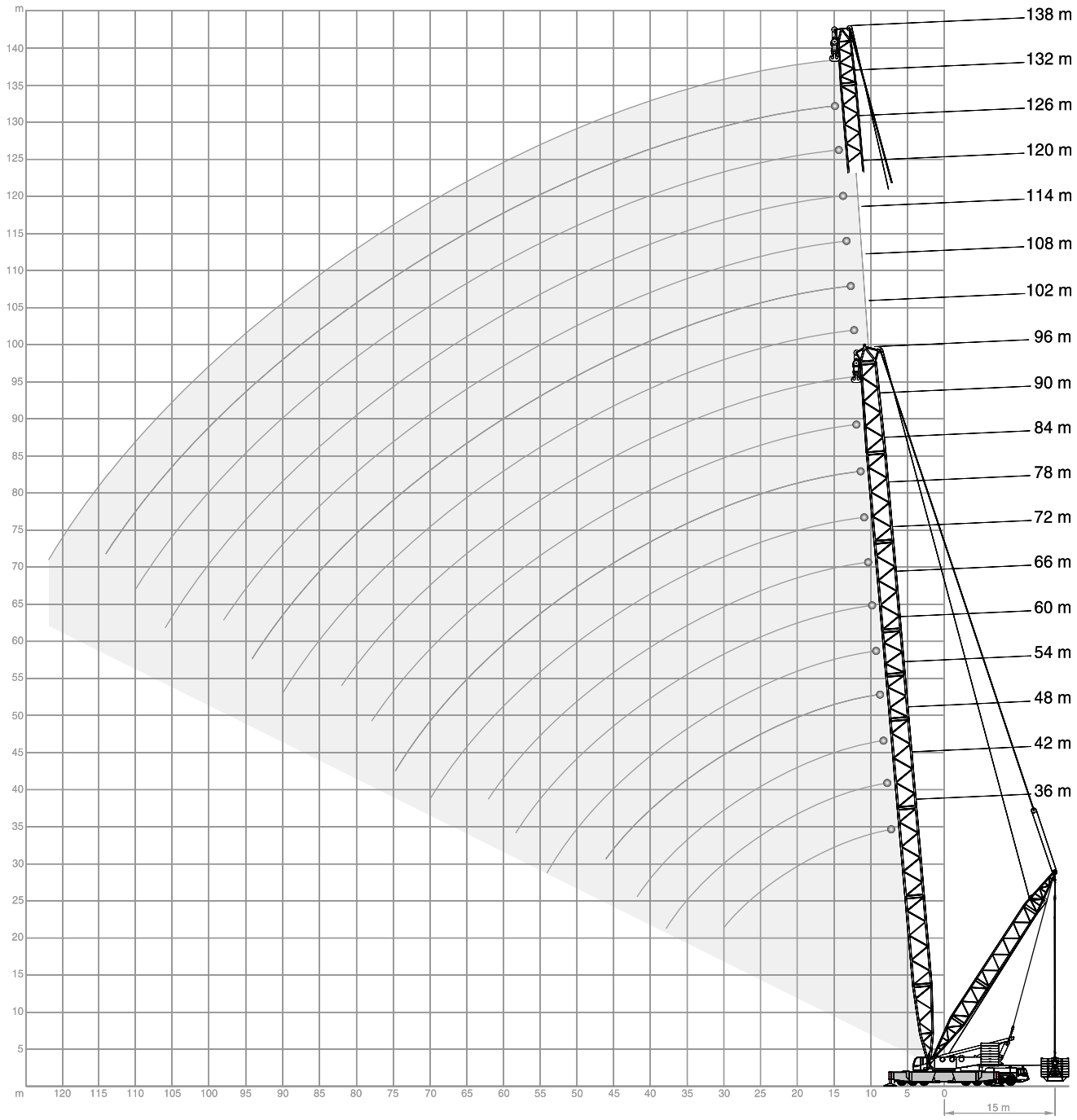

# SSL /HSSL LIFTING CAPACITIES · TRAGFÄHIGKEITEN · CAPACITÉS DE LEVAGE

160 t | 14 m x 14 m | 360° | DIN/ISO

| | 36 m | | | | 42 m | | | | 48 m | | | | 54 m | | | |
|---|---|---|---|---|---|---|---|---|---|---|---|---|---|---|---|---|
| | SSL | | | HSSL | SSL | | | HSSL | SSL | | | HSSL | SSL | | | HSSL |
| | 0 t | 0 t-300 t | | | 0 t | 0 t-300 t | | | 0 t | 0 t-300 t | | | 0 t | 0 t-300 t | | |
| | 11-15m | 17 m | | 11-15m | 11-15m | 17 m | | 11-15m | 11-15m | 17 m | | 11-15m | 11-15m | 17 m | | 11-15m |
| m | t | t | t | t | t | t | t | t | t | t | t | t | t | t | t | t |
| 7 | 544,0 | 600,0 | 600,0 | - | - | - | - | - | - | - | - | - | - | - | - | - |
| 8 | 499,0 | 600,0 | 600,0 | - | 496,0 | 593,0 | 593,0 | - | 494,0 | 580,0 | 580,0 | - | - | - | - | - |
| 9 | 427,0 | 600,0 | 600,0 | - | 425,0 | 593,0 | 593,0 | - | 426,0 | 580,0 | 580,0 | - | 427,0 | 525,0 | 525,0 | 525,0 |
| 10 | 369,0 | 599,0 | 599,0 | - | 367,0 | 593,0 | 593,0 | - | 367,0 | 580,0 | 580,0 | - | 368,0 | 525,0 | 525,0 | 525,0 |
| 12 | 289,0 | 534,0 | 566,0 | - | 287,0 | 531,0 | 563,0 | - | 286,0 | 529,0 | 560,0 | - | 286,0 | 525,0 | 525,0 | 525,0 |
| 14 | 236,0 | 476,0 | 504,0 | - | 233,0 | 473,0 | 501,0 | - | 232,0 | 470,0 | 498,0 | - | 232,0 | 468,0 | 496,0 | 466,0 |
| 16 | 198,0 | 428,0 | 454,0 | - | 196,0 | 425,0 | 451,0 | - | 194,0 | 423,0 | 448,0 | - | 193,0 | 421,0 | 446,0 | 419,0 |
| 18 | 170,0 | 389,0 | 412,0 | - | 167,0 | 386,0 | 409,0 | - | 166,0 | 384,0 | 407,0 | - | 165,0 | 382,0 | 405,0 | 380,0 |
| 20 | 148,0 | 356,0 | 371,0 | - | 146,0 | 353,0 | 375,0 | - | 144,0 | 351,0 | 372,0 | - | 143,0 | 349,0 | 371,0 | 347,0 |
| 22 | 131,0 | 323,0 | 323,0 | - | 128,0 | 322,0 | 343,0 | - | 127,0 | 320,0 | 341,0 | - | 125,0 | 318,0 | 339,0 | 307,0 |
| 24 | 118,0 | 284,0 | 284,0 | - | 114,0 | 294,0 | 305,0 | - | 112,0 | 292,0 | 311,0 | - | 111,0 | 291,0 | 309,0 | 275,0 |
| 26 | 106,0 | 251,0 | 251,0 | - | 104,0 | 269,0 | 273,0 | - | 100,0 | 267,0 | 284,0 | - | 99,5 | 266,0 | 284,0 | 247,0 |
| 28 | 97,0 | 228,0 | 222,0 | - | 94,0 | 245,0 | 245,0 | - | 91,0 | 244,0 | 256,0 | - | 89,5 | 244,0 | 262,0 | 224,0 |
| 30 | 88,5 | 203,0 | 196,0 | - | 85,5 | 220,0 | 220,0 | - | 83,5 | 226,0 | 234,0 | - | 80,5 | 224,0 | 239,0 | 205,0 |
| 34 | - | - | - | - | 71,5 | 181,0 | 178,0 | - | 69,5 | 194,0 | 194,0 | - | 68,0 | 194,0 | 202,0 | 174,0 |
| 38 | - | - | - | - | 60,5 | 149,0 | 143,0 | - | 58,5 | 161,0 | 161,0 | - | 57,0 | 170,0 | 171,0 | 147,0 |
| 42 | - | - | - | - | - | - | - | - | 50,0 | 138,0 | 133,0 | - | 48,5 | 146,0 | 146,0 | 125,0 |
| 46 | - | - | - | - | - | - | - | - | - | - | - | - | 41,9 | 124,0 | 123,0 | 106,0 |
| 49 | - | - | - | - | - | - | - | - | - | - | - | - | - | - | - | 93,0 |

| | 60 m | | | | 66 m | | | | 72 m | | | | 78 m | | | |
|---|---|---|---|---|---|---|---|---|---|---|---|---|---|---|---|---|
| | SSL | | | HSSL | SSL | | | HSSL | SSL | | | HSSL | SSL | | | HSSL |
| | 0 t | 0 t-300 t | | | 0 t | 0 t-300 t | | | 0 t | 0 t-300 t | | | 0 t | 0 t-300 t | | |
| | 11-15m | 17 m | | 11-15m | 11-15m | 17 m | | 11-15m | 11-15m | 17 m | | 11-15m | 11-15m | 17 m | | 11-15m |
| m | t | t | t | t | t | t | t | t | t | t | t | t | t | t | t | t |
| 9 | 426,0 | 476,0 | 476,0 | 476,0 | - | - | - | - | - | - | - | - | - | - | - | - |
| 10 | 368,0 | 476,0 | 476,0 | 476,0 | 369,0 | 414,0 | 414,0 | 421,0 | 350,0 | 373,0 | 373,0 | 393,0 | - | - | - | - |
| 11 | 327,0 | 476,0 | 476,0 | 476,0 | 327,0 | 414,0 | 414,0 | 421,0 | 318,0 | 373,0 | 373,0 | 393,0 | - | - | - | 364,0 |
| 12 | 286,0 | 476,0 | 476,0 | 476,0 | 285,0 | 414,0 | 414,0 | 421,0 | 286,0 | 373,0 | 373,0 | 393,0 | 285,0 | 316,0 | 316,0 | 364,0 |
| 14 | 231,0 | 466,0 | 476,0 | 464,0 | 231,0 | 414,0 | 414,0 | 421,0 | 231,0 | 373,0 | 373,0 | 393,0 | 231,0 | 316,0 | 316,0 | 364,0 |
| 16 | 193,0 | 419,0 | 445,0 | 417,0 | 192,0 | 409,0 | 409,0 | 415,0 | 192,0 | 373,0 | 373,0 | 393,0 | 191,0 | 316,0 | 316,0 | 364,0 |
| 18 | 164,0 | 380,0 | 403,0 | 378,0 | 163,0 | 378,0 | 388,0 | 376,0 | 163,0 | 362,0 | 362,0 | 374,0 | 162,0 | 315,0 | 315,0 | 364,0 |
| 20 | 142,0 | 347,0 | 369,0 | 344,0 | 141,0 | 346,0 | 367,0 | 335,0 | 140,0 | 344,0 | 345,0 | 329,0 | 139,0 | 306,0 | 306,0 | 322,0 |
| 22 | 124,0 | 317,0 | 337,0 | 305,0 | 123,0 | 315,0 | 336,0 | 298,0 | 122,0 | 314,0 | 328,0 | 293,0 | 121,0 | 298,0 | 298,0 | 286,0 |
| 24 | 110,0 | 289,0 | 308,0 | 274,0 | 109,0 | 287,0 | 306,0 | 268,0 | 108,0 | 286,0 | 305,0 | 264,0 | 107,0 | 285,0 | 290,0 | 258,0 |
| 26 | 98,0 | 265,0 | 283,0 | 247,0 | 97,0 | 264,0 | 281,0 | 243,0 | 96,0 | 262,0 | 279,0 | 239,0 | 95,0 | 261,0 | 273,0 | 234,0 |
| 28 | 88,0 | 243,0 | 261,0 | 225,0 | 86,5 | 242,0 | 259,0 | 221,0 | 85,5 | 242,0 | 256,0 | 218,0 | 84,5 | 240,0 | 250,0 | 214,0 |
| 30 | 79,5 | 224,0 | 240,0 | 205,0 | 78,0 | 223,0 | 238,0 | 203,0 | 77,0 | 222,0 | 235,0 | 200,0 | 76,0 | 222,0 | 231,0 | 196,0 |
| 34 | 65,5 | 192,0 | 204,0 | 174,0 | 64,0 | 191,0 | 204,0 | 172,0 | 63,0 | 191,0 | 202,0 | 171,0 | 61,5 | 190,0 | 199,0 | 168,0 |
| 38 | 55,5 | 169,0 | 176,0 | 150,0 | 53,5 | 167,0 | 176,0 | 148,0 | 52,0 | 166,0 | 176,0 | 148,0 | 50,5 | 166,0 | 173,0 | 146,0 |
| 42 | 47,1 | 150,0 | 152,0 | 130,0 | 45,8 | 149,0 | 155,0 | 130,0 | 43,5 | 147,0 | 154,0 | 128,0 | 42,2 | 146,0 | 153,0 | 127,0 |
| 46 | 40,3 | 131,0 | 131,0 | 112,0 | 38,8 | 133,0 | 135,0 | 113,0 | 37,2 | 132,0 | 137,0 | 114,0 | 35,9 | 131,0 | 136,0 | 113,0 |
| 50 | 34,8 | 113,0 | 113,0 | 96,5 | 33,1 | 118,0 | 118,0 | 99,5 | 31,4 | 119,0 | 121,0 | 100,0 | 30,0 | 118,0 | 121,0 | 100,0 |
| 54 | 30,3 | 100,0 | 96,5 | 82,0 | 28,4 | 103,0 | 103,0 | 86,5 | 26,6 | 107,0 | 107,0 | 88,5 | 25,1 | 107,0 | 108,0 | 89,0 |
| 58 | - | - | - | - | 24,6 | 91,0 | 89,5 | 75,0 | 22,6 | 94,5 | 94,5 | 78,0 | 21,0 | 96,5 | 96,5 | 79,0 |
| 59 | - | - | - | - | - | - | - | 72,0 | 21,7 | 91,5 | 91,5 | 75,5 | 20,1 | 93,7 | 93,7 | 76,7 |
| 62 | - | - | - | - | - | - | - | - | 19,3 | 82,5 | 82,5 | 68,0 | 17,5 | 85,5 | 85,5 | 70,0 |
| 65 | - | - | - | - | - | - | - | - | - | - | - | 61,0 | 15,3 | 78,0 | 78,0 | 63,6 |
| 66 | - | - | - | - | - | - | - | - | - | - | - | - | 14,6 | 75,5 | 75,5 | 61,5 |
| 70 | - | - | - | - | - | - | - | - | - | - | - | - | 12,2 | 69,0 | 66,0 | 53,5 |

**Remarks · Bemerkungen · Remarques**

For HSSL a boom power-kit is required
Für HSSL ist ein Ausleger-Verstärkungs-Kit erforderlich
Un kit à fortifier de flèche principale est nécessaire pour HSSL

autovictor

# SSL /HSSL LIFTING CAPACITIES · TRAGFÄHIGKEITEN · CAPACITÉS DE LEVAGE

160 t | 14 m x 14 m | 360° | DIN/ISO

| | 84 m | | | | 90 m | | | | 96 m | | | | 102 m | 108 m |
|---|---|---|---|---|---|---|---|---|---|---|---|---|---|---|
| | SSL | | | HSSL | SSL | | | HSSL | SSL | | | HSSL | HSSL | HSSL |
| | 0 t | 0 t-300 t | | | 0 t | 0 t-300 t | | | 0 t | 0 t-300 t | | | 0 t-300 t | 0 t-300 t |
| | 11-15 m | | 17 m | 11-15 m | 11-15 m | | 17 m | 11-15 m | 11-15 m | | 17 m | 11-15 m | 11-15 m | 11-15 m |
| m | t | t | t | t | t | t | t | t | t | t | t | t | t | t |
| 11 | - | - | - | 307,0 | - | - | - | - | - | - | - | - | - | - |
| 12 | 272,0 | 281,0 | 281,0 | 307,0 | 233,0 | 238,0 | 238,0 | 289,0 | 203,0 | 208,0 | 208,0 | 253,0 | - | - |
| 13 | 249,0 | 281,0 | 281,0 | 307,0 | 225,0 | 238,0 | 238,0 | 288,5 | 203,0 | 208,0 | 208,0 | 252,5 | 218,0 | 191,0 |
| 14 | 226,0 | 281,0 | 281,0 | 307,0 | 217,0 | 238,0 | 238,0 | 288,0 | 203,0 | 208,0 | 208,0 | 252,0 | 218,0 | 191,0 |
| 16 | 189,0 | 281,0 | 281,0 | 307,0 | 185,0 | 238,0 | 238,0 | 287,0 | 178,0 | 208,0 | 208,0 | 250,0 | 215,0 | 189,0 |
| 18 | 160,0 | 281,0 | 281,0 | 307,0 | 159,0 | 238,0 | 238,0 | 286,0 | 154,0 | 208,0 | 208,0 | 248,0 | 212,0 | 187,0 |
| 20 | 137,0 | 278,0 | 278,0 | 307,0 | 137,0 | 237,0 | 237,0 | 284,0 | 136,0 | 208,0 | 208,0 | 246,0 | 210,0 | 184,0 |
| 22 | 119,0 | 271,0 | 271,0 | 276,0 | 119,0 | 233,0 | 233,0 | 271,0 | 117,0 | 205,0 | 205,0 | 242,0 | 208,0 | 182,0 |
| 24 | 105,0 | 265,0 | 265,0 | 248,0 | 104,0 | 229,0 | 229,0 | 243,0 | 103,0 | 201,0 | 201,0 | 236,0 | 203,0 | 179,0 |
| 26 | 92,5 | 259,0 | 259,0 | 226,0 | 91,5 | 225,0 | 225,0 | 221,0 | 90,5 | 197,0 | 197,0 | 215,0 | 198,0 | 174,0 |
| 28 | 82,5 | 238,0 | 241,0 | 206,0 | 81,5 | 220,0 | 220,0 | 202,0 | 80,0 | 193,0 | 193,0 | 196,0 | 191,0 | 170,0 |
| 30 | 73,5 | 220,0 | 223,0 | 190,0 | 72,5 | 212,0 | 212,0 | 186,0 | 71,5 | 189,0 | 189,0 | 180,0 | 175,0 | 165,0 |
| 34 | 59,5 | 188,0 | 192,0 | 162,0 | 58,5 | 188,0 | 188,0 | 159,0 | 57,0 | 176,0 | 176,0 | 154,0 | 150,0 | 144,0 |
| 38 | 48,6 | 164,0 | 168,0 | 141,0 | 47,5 | 163,0 | 164,0 | 138,0 | 46,0 | 160,0 | 160,0 | 134,0 | 130,0 | 125,0 |
| 42 | 39,9 | 145,0 | 148,0 | 124,0 | 38,7 | 144,0 | 145,0 | 122,0 | 37,2 | 142,0 | 142,0 | 117,0 | 115,0 | 110,0 |
| 46 | 32,8 | 129,0 | 132,0 | 109,0 | 31,6 | 128,0 | 130,0 | 107,0 | 30,0 | 127,0 | 127,0 | 104,0 | 101,0 | 97,0 |
| 50 | 27,7 | 116,0 | 119,0 | 97,5 | 25,7 | 115,0 | 116,0 | 95,5 | 24,1 | 113,0 | 114,0 | 92,5 | 90,5 | 86,5 |
| 54 | 22,7 | 105,0 | 106,0 | 86,5 | 21,4 | 104,0 | 105,0 | 86,0 | 19,1 | 102,0 | 102,0 | 82,5 | 81,0 | 77,0 |
| 58 | 18,6 | 95,5 | 95,5 | 77,5 | 17,2 | 94,5 | 95,0 | 76,5 | 15,5 | 93,0 | 93,0 | 74,0 | 72,5 | 69,0 |
| 62 | 15,0 | 85,5 | 85,5 | 69,0 | 13,6 | 85,5 | 85,5 | 69,0 | 11,9 | 84,0 | 84,0 | 66,0 | 65,5 | 62,5 |
| 66 | 12,0 | 76,5 | 76,5 | 61,5 | 10,5 | 77,0 | 77,0 | 62,0 | 8,7 | 76,0 | 76,0 | 59,5 | 58,5 | 56,0 |
| 70 | 9,5 | 68,0 | 68,0 | 54,5 | 7,9 | 69,0 | 69,0 | 55,0 | 6,0 | 69,0 | 69,0 | 53,0 | 52,5 | 50,0 |
| 74 | 7,4 | 62,0 | 60,0 | 47,7 | 5,6 | 62,0 | 62,0 | 49,3 | - | 62,0 | 62,0 | 47,7 | 47,6 | 45,0 |
| 75 | - | - | - | 46,1 | - | 60,2 | 60,2 | 47,8 | - | 60,3 | 60,3 | 46,3 | 46,3 | 43,8 |
| 78 | - | - | - | - | - | 56,0 | 55,0 | 43,4 | - | 55,5 | 55,5 | 42,3 | 42,6 | 40,4 |
| 80 | - | - | - | - | - | - | - | 40,5 | - | 52,5 | 52,5 | 39,7 | 40,3 | 38,2 |
| 82 | - | - | - | - | - | - | - | - | - | 50,5 | 49,5 | 37,2 | 38,0 | 36,1 |
| 85 | - | - | - | - | - | - | - | - | - | - | - | 33,5 | 34,7 | 33,0 |
| 86 | - | - | - | - | - | - | - | - | - | - | - | - | 33,6 | 32,0 |
| 90 | - | - | - | - | - | - | - | - | - | - | - | - | 29,3 | 28,2 |
| 91 | - | - | - | - | - | - | - | - | - | - | - | - | 28,2 | 27,2 |
| 94 | - | - | - | - | - | - | - | - | - | - | - | - | - | 24,4 |
| 96 | - | - | - | - | - | - | - | - | - | - | - | - | - | 22,6 |

**Remarks · Bemerkungen · Remarques**

For HSSL a boom power-kit is required
Für HSSL ist ein Ausleger-Verstärkungs-Kit erforderlich
Un kit à fortifier de flèche principale est nécessaire pour HSSL

# SSL /LSL LIFTING CAPACITIES · TRAGFÄHIGKEITEN · CAPACITÉS DE LEVAGE

160 t | 11-15 m | 14 m x 14 m | 360° | DIN/ISO

| | 90 m | | | 96 m | | | 102 m | | |
|---|---|---|---|---|---|---|---|---|---|
| | SSL/LSL | | SSL/LSL SGLmax. | SSL/LSL | | SSL/LSL SGLmax. | SSL/LSL | | SSL/LSL SGLmax. |
| | 0 t | 0 t-300 t | | 0 t | 0 t-300 t | | 0 t | 0 t-300 t | |
| m | t | t | t | t | t | t | t | t | t |
| 12 | 239,0 | 248,0 | 249,0 | 207,0 | 215,0 | 224,0 | - | - | - |
| 13 | 230,0 | 248,0 | 249,0 | 206,5 | 214,5 | 223,0 | - | - | 204,0 |
| 14 | 221,0 | 248,0 | 249,0 | 206,0 | 214,0 | 222,0 | 173,0 | 181,0 | 203,0 |
| 16 | 189,0 | 248,0 | 249,0 | 183,0 | 213,0 | 220,0 | 171,0 | 179,0 | 199,0 |
| 18 | 164,0 | 248,0 | 249,0 | 159,0 | 212,0 | 217,0 | 155,0 | 178,0 | 196,0 |
| 20 | 144,0 | 246,0 | 247,0 | 141,0 | 211,0 | 215,0 | 137,0 | 176,0 | 193,0 |
| 22 | 126,0 | 241,0 | 241,0 | 125,0 | 209,0 | 210,0 | 122,0 | 174,0 | 190,0 |
| 24 | 111,0 | 235,0 | 236,0 | 111,0 | 205,0 | 205,0 | 109,0 | 172,0 | 185,0 |
| 26 | 99,0 | 230,0 | 230,0 | 99,0 | 202,0 | 200,0 | 98,5 | 170,0 | 180,0 |
| 28 | 89,0 | 224,0 | 211,0 | 88,5 | 199,0 | 195,0 | 88,0 | 168,0 | 175,0 |
| 30 | 80,0 | 212,0 | 195,0 | 79,5 | 194,0 | 188,0 | 79,5 | 166,0 | 170,0 |
| 34 | 66,0 | 191,0 | 169,6 | 65,5 | 178,0 | 165,3 | 65,0 | 156,0 | 156,6 |
| 38 | 54,5 | 169,0 | 148,0 | 54,0 | 163,0 | 145,3 | 54,0 | 145,0 | 141,6 |
| 42 | 46,1 | 149,0 | 130,0 | 45,5 | 148,0 | 128,0 | 45,1 | 134,0 | 125,0 |
| 46 | 38,9 | 133,0 | 116,6 | 38,3 | 133,0 | 114,6 | 37,8 | 124,0 | 111,6 |
| 50 | 33,0 | 120,0 | 104,8 | 32,3 | 120,0 | 102,8 | 31,8 | 114,0 | 100,1 |
| 54 | 28,6 | 109,0 | 94,5 | 27,3 | 108,0 | 92,5 | 26,8 | 107,0 | 90,5 |
| 58 | 24,3 | 100,0 | 85,1 | 23,6 | 99,5 | 84,1 | 22,4 | 98,5 | 82,5 |
| 62 | 20,6 | 91,5 | 77,1 | 19,8 | 91,0 | 76,3 | 19,2 | 91,0 | 74,8 |
| 66 | 17,3 | 84,0 | 69,5 | 16,6 | 83,0 | 69,0 | 16,0 | 83,5 | 67,5 |
| 70 | 14,5 | 76,0 | 63,1 | 13,7 | 76,0 | 63,0 | 13,1 | 77,0 | 61,5 |
| 74 | 12,0 | 68,5 | 56,8 | 11,2 | 69,0 | 57,1 | 10,5 | 70,0 | 56,0 |
| 78 | 9,9 | 61,0 | 50,5 | 9,0 | 63,0 | 51,5 | 8,3 | 64,0 | 51,0 |
| 80 | - | - | 47,7 | 8,0 | 59,7 | 48,9 | 7,3 | 61,0 | 48,6 |
| 82 | - | - | - | 7,0 | 56,5 | 46,3 | 6,3 | 58,0 | 46,2 |
| 85 | - | - | - | - | - | 42,5 | 4,9 | 53,8 | 42,6 |
| 86 | - | - | - | - | - | - | 4,5 | 52,5 | 41,4 |
| 90 | - | - | - | - | - | - | - | 48,3 | 36,8 |

| | 108 m | | | 114 m | | | 120 m | | |
|---|---|---|---|---|---|---|---|---|---|
| | SSL/LSL | | SSL/LSL SGLmax. | SSL/LSL | | SSL/LSL SGLmax. | SSL/LSL | | SSL/LSL SGLmax. |
| | 0 t | 0 t-300 t | | 0 t | 0 t-300 t | | 0 t | 0 t-300 t | |
| m | t | t | t | t | t | t | t | t | t |
| 13 | - | - | 183,0 | - | - | - | - | - | - |
| 14 | 147,0 | 153,0 | 183,0 | 129,0 | 134,0 | 162,0 | 119,0 | 122,0 | 146,0 |
| 16 | 143,0 | 150,0 | 181,0 | 126,0 | 132,0 | 161,0 | 117,0 | 121,0 | 146,0 |
| 18 | 139,0 | 147,0 | 180,0 | 124,0 | 131,0 | 160,0 | 115,0 | 120,0 | 145,0 |
| 20 | 133,0 | 145,0 | 178,0 | 121,0 | 129,0 | 159,0 | 112,0 | 118,0 | 144,0 |
| 22 | 118,0 | 142,0 | 176,0 | 115,0 | 127,0 | 158,0 | 110,0 | 117,0 | 143,0 |
| 24 | 106,0 | 139,0 | 174,0 | 103,0 | 126,0 | 157,0 | 101,0 | 115,0 | 142,0 |
| 26 | 96,5 | 136,0 | 171,0 | 94,0 | 124,0 | 155,0 | 92,0 | 114,0 | 141,0 |
| 28 | 87,0 | 133,0 | 169,0 | 85,5 | 122,0 | 154,0 | 83,5 | 112,0 | 140,0 |
| 30 | 78,0 | 130,0 | 166,0 | 78,0 | 120,0 | 152,0 | 76,5 | 111,0 | 138,0 |
| 34 | 64,0 | 124,0 | 150,6 | 63,5 | 117,0 | 144,6 | 63,5 | 107,0 | 134,6 |
| 38 | 52,5 | 119,0 | 136,6 | 52,5 | 113,0 | 133,0 | 52,0 | 104,0 | 126,0 |
| 42 | 43,9 | 114,0 | 120,0 | 43,6 | 108,0 | 117,0 | 43,4 | 100,0 | 112,0 |
| 46 | 36,7 | 108,0 | 107,3 | 36,3 | 104,0 | 104,6 | 36,1 | 97,0 | 100,3 |
| 50 | 30,6 | 103,0 | 96,1 | 30,3 | 99,0 | 93,6 | 30,0 | 93,0 | 89,8 |
| 54 | 25,6 | 98,0 | 86,5 | 25,2 | 95,0 | 84,0 | 24,9 | 90,0 | 80,5 |
| 58 | 21,2 | 93,0 | 78,5 | 20,8 | 91,0 | 76,3 | 20,6 | 86,0 | 72,8 |
| 62 | 18,0 | 88,0 | 71,3 | 17,0 | 86,0 | 69,3 | 16,8 | 82,0 | 65,8 |
| 66 | 14,7 | 82,0 | 65,0 | 14,3 | 81,5 | 63,0 | 13,5 | 79,0 | 59,5 |
| 70 | 11,8 | 75,5 | 59,0 | 11,4 | 74,5 | 57,3 | 11,1 | 73,5 | 54,5 |
| 74 | 9,3 | 69,0 | 53,5 | 8,8 | 68,5 | 52,0 | 8,5 | 68,0 | 49,7 |
| 78 | 7,0 | 63,5 | 48,7 | 6,5 | 63,0 | 47,1 | 6,2 | 62,5 | 45,1 |
| 82 | 5,0 | 58,0 | 44,3 | 4,4 | 58,0 | 42,8 | 4,2 | 58,0 | 40,8 |
| 86 | - | 53,0 | 40,0 | - | 53,0 | 38,7 | - | 53,0 | 36,8 |
| 90 | - | 48,0 | 35,9 | - | 48,8 | 34,9 | - | 49,1 | 33,2 |
| 94 | - | 44,0 | 31,8 | - | 44,3 | 31,2 | - | 45,0 | 29,8 |
| 96 | - | - | 29,8 | - | 42,5 | 29,4 | - | 43,0 | 28,2 |
| 98 | - | - | - | - | 41,1 | 27,6 | - | 41,0 | 26,5 |
| 101 | - | - | - | - | - | 24,9 | - | 38,7 | 24,1 |
| 102 | - | - | - | - | - | - | - | 38,0 | 23,3 |
| 106 | - | - | - | - | - | - | - | 34,6 | 20,2 |

autovictor

# SSL /LSL LIFTING CAPACITIES · TRAGFÄHIGKEITEN · CAPACITÉS DE LEVAGE

160 t | 11-15 m | 14 m x 14 m | 360° | DIN/ISO

| | 126 m | | | 132 m | | | 138 m | | |
|---|---|---|---|---|---|---|---|---|---|
| | SSL/LSL | | SSL/LSL SGLmax. | SSL/LSL | | SSL/LSL SGLmax. | SSL/LSL | | SSL/LSL SGLmax. |
| | 0 t | 0 t-300 t | | 0 t | 0 t-300 t | | 0 t | 0 t-300 t | |
| m | t | t | t | t | t | t | t | t | t |
| 15 | - | - | 129,0 | - | - | 117,0 | - | - | - |
| 16 | 106,0 | 109,0 | 129,0 | 92,0 | 96,0 | 117,0 | 79,0 | 82,0 | 103,0 |
| 18 | 104,0 | 108,0 | 128,0 | 90,0 | 95,0 | 116,0 | 77,0 | 80,0 | 102,0 |
| 20 | 103,0 | 108,0 | 127,0 | 88,0 | 94,0 | 115,0 | 74,0 | 79,0 | 101,0 |
| 22 | 102,0 | 107,0 | 126,0 | 87,0 | 93,0 | 114,0 | 72,0 | 78,0 | 100,0 |
| 24 | 99,0 | 106,0 | 125,0 | 85,0 | 92,0 | 113,0 | 70,0 | 77,0 | 99,0 |
| 26 | 89,5 | 105,0 | 124,0 | 84,0 | 91,0 | 112,0 | 69,0 | 75,0 | 98,0 |
| 28 | 81,5 | 104,0 | 124,0 | 79,0 | 90,0 | 111,0 | 67,0 | 74,0 | 97,0 |
| 30 | 74,5 | 103,0 | 123,0 | 72,0 | 89,0 | 110,0 | 66,0 | 73,0 | 95,5 |
| 34 | 62,5 | 101,0 | 121,0 | 60,5 | 87,0 | 108,0 | 59,0 | 71,0 | 93,5 |
| 38 | 52,0 | 99,0 | 116,3 | 50,5 | 86,0 | 105,3 | 50,0 | 68,0 | 91,3 |
| 42 | 43,1 | 97,0 | 109,0 | 41,9 | 85,0 | 102,0 | 41,0 | 66,0 | 89,0 |
| 46 | 35,8 | 94,0 | 97,6 | 34,5 | 83,0 | 92,6 | 33,7 | 63,0 | 85,3 |
| 50 | 29,7 | 91,0 | 87,3 | 28,4 | 82,0 | 83,3 | 27,5 | 61,0 | 79,1 |
| 54 | 24,5 | 88,0 | 78,0 | 23,3 | 80,0 | 74,0 | 22,4 | 58,0 | 70,5 |
| 58 | 20,2 | 85,0 | 70,6 | 18,9 | 78,0 | 67,0 | 18,0 | 55,0 | 63,5 |
| 62 | 16,4 | 82,0 | 63,8 | 15,1 | 75,0 | 60,5 | 14,2 | 52,0 | 57,0 |
| 66 | 13,1 | 78,5 | 57,5 | 11,8 | 73,0 | 54,5 | 10,9 | 49,0 | 51,0 |
| 70 | 10,2 | 72,0 | 52,3 | 8,9 | 69,5 | 49,3 | 7,9 | 46,0 | 46,2 |
| 74 | 8,0 | 67,0 | 47,7 | 6,3 | 64,5 | 44,7 | 5,4 | 42,0 | 41,9 |
| 78 | 5,7 | 62,0 | 43,3 | 4,4 | 60,0 | 40,6 | - | 39,0 | 37,9 |
| 82 | - | 57,5 | 39,1 | - | 55,5 | 36,6 | - | 36,0 | 33,9 |
| 86 | - | 53,0 | 35,2 | - | 51,0 | 32,8 | - | 33,9 | 30,4 |
| 90 | - | 48,9 | 31,5 | - | 47,4 | 29,3 | - | 32,9 | 27,0 |
| 94 | - | 45,0 | 28,3 | - | 43,7 | 26,1 | - | 31,9 | 23,9 |
| 98 | - | 41,3 | 25,2 | - | 40,2 | 23,1 | - | 30,9 | 20,9 |
| 102 | - | 37,8 | 22,3 | - | 36,8 | 20,3 | - | 29,8 | 18,2 |
| 106 | - | 35,1 | 19,3 | - | 33,6 | 17,7 | - | 28,8 | 15,7 |
| 110 | - | 31,8 | 16,5 | - | 30,6 | 15,1 | - | 27,8 | 13,3 |
| 111 | - | - | 15,8 | - | 29,9 | 14,4 | - | 27,5 | 12,7 |
| 114 | - | - | - | - | 28,1 | 12,5 | - | 26,8 | 11,0 |
| 116 | - | - | - | - | - | 11,2 | - | 25,6 | 9,8 |
| 118 | - | - | - | - | - | - | - | 24,4 | 8,6 |
| 122 | - | - | - | - | - | - | - | 22,6 | 6,4 |
| 126 | - | - | - | - | - | - | - | - | - |

**Remarks · Bemerkungen · Remarques**

For SSL/LSL SGLmax. a boom power-kit is required
Für SSL/LSL SGLmax. ist ein Ausleger-Verstärkungs-Kit erforderlich
Un kit à fortifier de flèche principale est nécessaire pour SSL/LSL SGLmax.

# SH+LF2, SH/LH+LF2 WORKING RANGES · ARBEITSBEREICHE · PORTÉES

10°

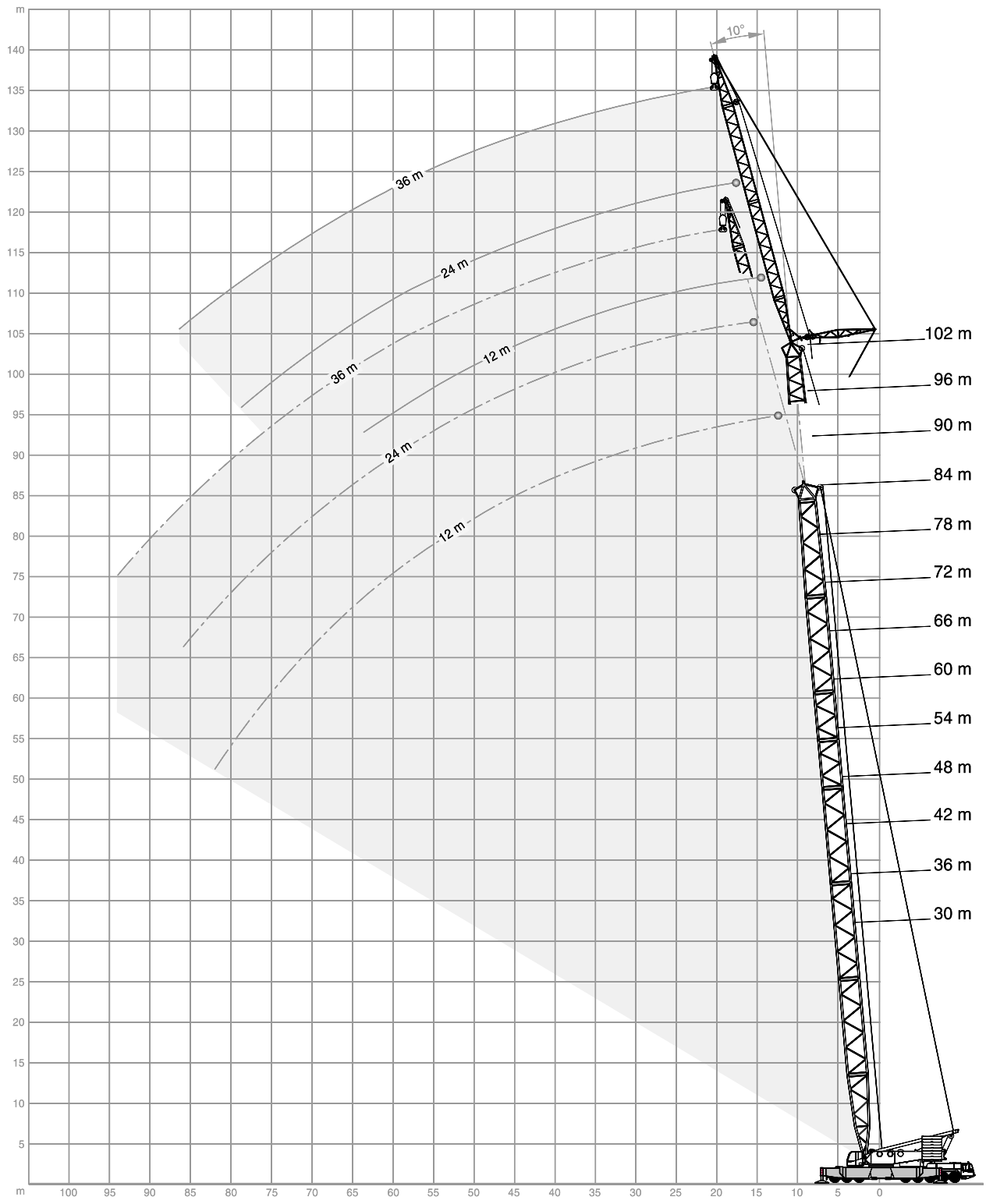

autovictor

# SH+LF2 LIFTING CAPACITIES · TRAGFÄHIGKEITEN · CAPACITÉS DE LEVAGE

200 t | 12 m | 14 m x 14 m | 360° | DIN/ISO

| | 30 m | | | 36 m | | | 42 m | | | 48 m | | | 54 m | | |
|---|---|---|---|---|---|---|---|---|---|---|---|---|---|---|---|
| | 10° | 15° | 20° | 10° | 15° | 20° | 10° | 15° | 20° | 10° | 15° | 20° | 10° | 15° | 20° |
| m | t | t | t | t | t | t | t | t | t | t | t | t | t | t | t |
| 9 | 125,0 | - | - | 125,0 | - | - | - | - | - | - | - | - | - | - | - |
| 10 | 125,0 | 107,0 | - | 125,0 | 108,0 | - | 125,0 | - | - | 125,0 | - | - | - | - | - |
| 11 | 124,0 | 101,0 | 81,0 | 125,0 | 105,0 | 83,5 | 125,0 | 109,0 | - | 125,0 | 109,0 | - | 125,0 | - | - |
| 12 | 119,0 | 94,5 | 77,0 | 123,0 | 99,5 | 79,5 | 125,0 | 103,0 | 81,5 | 125,0 | 106,0 | 82,0 | 125,0 | 109,0 | - |
| 13 | 111,0 | 89,5 | 73,0 | 120,0 | 94,0 | 76,0 | 123,0 | 98,5 | 78,5 | 124,0 | 102,0 | 80,5 | 125,0 | 105,0 | 82,0 |
| 14 | 104,0 | 84,5 | 70,0 | 113,0 | 89,5 | 73,0 | 120,0 | 93,5 | 75,5 | 122,0 | 97,5 | 77,5 | 124,0 | 100,0 | 79,0 |
| 16 | 93,0 | 76,5 | 64,0 | 100,0 | 81,5 | 67,0 | 108,0 | 86,0 | 70,0 | 114,0 | 89,5 | 72,0 | 119,0 | 93,0 | 74,0 |
| 18 | 83,5 | 70,0 | 59,0 | 91,0 | 74,5 | 62,5 | 98,0 | 79,0 | 65,0 | 104,0 | 83,0 | 67,5 | 110,0 | 86,5 | 70,0 |
| 20 | 75,5 | 64,0 | 55,0 | 83,0 | 69,0 | 58,5 | 89,5 | 73,5 | 61,0 | 95,5 | 77,0 | 63,5 | 101,0 | 80,5 | 66,0 |
| 22 | 68,5 | 59,5 | 51,5 | 76,0 | 64,0 | 54,5 | 82,5 | 68,5 | 57,5 | 88,5 | 72,5 | 60,0 | 94,0 | 76,0 | 62,5 |
| 24 | 64,0 | 55,5 | 48,5 | 69,5 | 60,0 | 51,5 | 76,5 | 64,0 | 54,5 | 82,5 | 68,0 | 57,0 | 87,5 | 71,5 | 59,5 |
| 26 | 59,5 | 52,0 | 45,8 | 65,0 | 56,5 | 49,0 | 70,5 | 60,5 | 51,5 | 76,5 | 64,0 | 54,5 | 82,0 | 67,5 | 56,5 |
| 28 | 55,5 | 49,2 | 43,5 | 61,5 | 53,0 | 46,6 | 66,0 | 57,0 | 49,4 | 71,5 | 61,0 | 52,0 | 76,5 | 64,0 | 54,0 |
| 30 | 52,5 | 46,5 | 41,4 | 58,0 | 50,5 | 44,4 | 63,0 | 54,0 | 47,2 | 67,0 | 57,5 | 49,7 | 72,0 | 61,0 | 52,0 |
| 34 | 46,9 | 42,2 | 38,1 | 51,5 | 45,9 | 40,8 | 56,5 | 49,5 | 43,4 | 61,0 | 52,5 | 45,8 | 64,5 | 55,5 | 48,0 |
| 38 | 42,6 | 38,9 | 35,6 | 47,1 | 42,2 | 38,0 | 51,0 | 45,5 | 40,4 | 55,5 | 48,5 | 42,6 | 59,5 | 51,0 | 44,7 |
| 39 | 41,8 | 38,3 | - | 46,1 | 41,4 | 37,4 | 50,0 | 44,6 | 39,7 | 54,3 | 47,6 | 41,9 | 58,2 | 50,2 | 44,0 |
| 40 | - | 37,7 | - | 45,2 | 40,7 | 36,9 | 49,1 | 43,8 | 39,1 | 53,2 | 46,8 | 41,3 | 57,0 | 49,4 | 43,3 |
| 42 | - | - | - | 43,3 | 39,3 | 35,8 | 47,2 | 42,2 | 37,9 | 51,0 | 45,1 | 40,0 | 54,5 | 47,8 | 42,0 |
| 43 | - | - | - | 42,5 | 38,7 | 35,4 | 46,3 | 41,5 | 37,4 | 50,0 | 44,3 | 39,4 | 53,5 | 47,0 | 41,4 |
| 45 | - | - | - | 41,0 | 37,7 | - | 44,5 | 40,2 | 36,4 | 48,1 | 42,9 | 38,3 | 51,5 | 45,4 | 40,2 |
| 46 | - | - | - | - | - | - | 43,7 | 39,6 | 36,0 | 47,2 | 42,2 | 37,8 | 50,5 | 44,7 | 39,6 |
| 48 | - | - | - | - | - | - | 42,3 | 38,6 | 35,2 | 45,6 | 41,0 | 36,9 | 48,1 | 43,4 | 38,6 |
| 50 | - | - | - | - | - | - | 41,0 | 37,6 | - | 44,1 | 39,8 | 36,1 | 45,8 | 42,1 | 37,7 |
| 53 | - | - | - | - | - | - | - | - | - | 42,1 | 38,3 | 35,0 | 41,8 | 40,5 | 36,5 |
| 54 | - | - | - | - | - | - | - | - | - | 41,5 | 37,9 | - | 40,5 | 40,0 | 36,1 |
| 55 | - | - | - | - | - | - | - | - | - | 40,5 | 37,5 | - | 39,4 | 39,0 | 35,8 |
| 58 | - | - | - | - | - | - | - | - | - | - | - | - | 36,1 | 36,2 | 34,9 |
| 60 | - | - | - | - | - | - | - | - | - | - | - | - | 34,2 | 34,2 | - |
| 61 | - | - | - | - | - | - | - | - | - | - | - | - | - | 33,3 | - |
| 62 | - | - | - | - | - | - | - | - | - | - | - | - | - | - | - |

# SH+LF2 LIFTING CAPACITIES · TRAGFÄHIGKEITEN · CAPACITÉS DE LEVAGE

200 t | 12 m | 14 m x 14 m | 360° | DIN/ISO

| | 60 m | | | 66 m | | | 72 m | | | 78 m | | | 84 m | | |
|---|---|---|---|---|---|---|---|---|---|---|---|---|---|---|---|
| | 10° | 15° | 20° | 10° | 15° | 20° | 10° | 15° | 20° | 10° | 15° | 20° | 10° | 15° | 20° |
| m | t | t | t | t | t | t | t | t | t | t | t | t | t | t | t |
| 11 | 125,0 | - | - | - | - | - | - | - | - | - | - | - | - | - | - |
| 12 | 125,0 | 108,0 | - | 125,0 | - | - | 125,0 | - | - | - | - | - | - | - | - |
| 13 | 125,0 | 107,0 | 81,5 | 125,0 | 106,0 | - | 125,0 | 108,0 | - | 125,0 | - | - | 125,0 | - | - |
| 14 | 125,0 | 103,0 | 80,5 | 125,0 | 106,0 | 80,5 | 125,0 | 108,0 | 81,5 | 125,0 | 106,0 | - | 125,0 | 104,0 | - |
| 15 | 124,0 | 99,5 | 78,0 | 125,0 | 102,0 | 79,5 | 125,0 | 104,0 | 81,0 | 125,0 | 106,0 | 80,0 | 125,0 | 104,0 | 79,0 |
| 16 | 121,0 | 96,0 | 76,0 | 124,0 | 98,5 | 77,5 | 125,0 | 101,0 | 78,5 | 125,0 | 103,0 | 80,0 | 125,0 | 104,0 | 79,0 |
| 18 | 115,0 | 89,5 | 71,5 | 118,0 | 92,5 | 73,5 | 121,0 | 95,0 | 74,5 | 124,0 | 97,0 | 76,0 | 125,0 | 99,0 | 77,0 |
| 20 | 106,0 | 84,0 | 68,0 | 111,0 | 86,5 | 69,5 | 115,0 | 89,5 | 71,0 | 118,0 | 91,5 | 72,5 | 121,0 | 94,0 | 74,0 |
| 22 | 99,0 | 79,0 | 64,5 | 104,0 | 82,0 | 66,0 | 108,0 | 84,5 | 68,0 | 112,0 | 87,0 | 69,5 | 115,0 | 89,0 | 70,5 |
| 24 | 92,5 | 74,5 | 61,5 | 97,0 | 77,5 | 63,0 | 101,0 | 80,0 | 65,0 | 105,0 | 82,5 | 66,5 | 109,0 | 85,0 | 68,0 |
| 26 | 86,5 | 70,5 | 58,5 | 91,5 | 73,5 | 60,5 | 95,5 | 76,0 | 62,0 | 99,5 | 78,5 | 64,0 | 103,0 | 81,0 | 65,0 |
| 28 | 81,5 | 67,0 | 56,0 | 86,0 | 70,0 | 58,0 | 90,0 | 72,5 | 59,5 | 94,0 | 75,0 | 61,5 | 98,0 | 77,5 | 63,0 |
| 30 | 77,0 | 64,0 | 54,0 | 81,5 | 67,0 | 55,5 | 85,5 | 69,5 | 57,5 | 89,5 | 72,0 | 59,0 | 93,0 | 74,0 | 60,5 |
| 34 | 68,5 | 58,5 | 50,0 | 73,0 | 61,0 | 51,5 | 76,5 | 63,5 | 53,5 | 78,5 | 66,0 | 55,0 | 77,5 | 68,5 | 56,5 |
| 38 | 62,5 | 54,0 | 46,7 | 66,0 | 56,5 | 48,5 | 66,5 | 59,0 | 50,0 | 65,5 | 61,5 | 51,5 | 64,0 | 63,5 | 53,0 |
| 42 | 58,0 | 50,0 | 43,8 | 57,5 | 52,5 | 45,6 | 56,5 | 55,0 | 47,2 | 55,5 | 56,0 | 48,8 | 54,0 | 54,5 | 50,0 |
| 46 | 50,5 | 47,1 | 41,4 | 49,8 | 49,5 | 43,1 | 48,5 | 48,9 | 44,7 | 47,5 | 47,9 | 46,2 | 46,2 | 46,6 | 47,1 |
| 50 | 44,4 | 44,4 | 39,3 | 43,4 | 43,7 | 40,9 | 42,0 | 42,4 | 42,4 | 41,0 | 41,3 | 41,7 | 39,6 | 40,0 | 40,4 |
| 54 | 39,1 | 39,3 | 37,6 | 38,0 | 38,3 | 38,5 | 36,7 | 36,9 | 37,2 | 35,6 | 35,9 | 36,2 | 34,0 | 34,4 | 34,7 |
| 58 | 34,6 | 34,8 | 35,0 | 33,6 | 33,8 | 34,0 | 32,0 | 32,3 | 32,6 | 30,7 | 31,1 | 31,4 | 29,1 | 29,5 | 29,8 |
| 62 | 30,9 | 31,0 | 31,1 | 29,6 | 29,8 | 30,0 | 28,0 | 28,2 | 28,4 | 26,6 | 26,9 | 27,2 | 25,0 | 25,3 | 25,6 |
| 63 | 30,0 | 30,1 | 30,2 | 28,7 | 28,9 | 29,1 | 27,1 | 27,3 | 27,5 | 25,7 | 26,0 | 26,3 | 24,1 | 24,4 | 24,7 |
| 65 | 28,3 | 28,4 | - | 27,0 | 27,1 | 27,3 | 25,3 | 25,5 | 25,7 | 23,9 | 24,2 | 24,5 | 22,3 | 22,6 | 22,9 |
| 66 | - | 27,6 | - | 26,2 | 26,3 | 26,5 | 24,5 | 24,7 | 24,8 | 23,1 | 23,3 | 23,6 | 21,4 | 21,7 | 22,0 |
| 68 | - | - | - | 24,7 | 24,8 | 24,9 | 22,9 | 23,1 | 23,2 | 21,6 | 21,8 | 22,0 | 19,9 | 20,1 | 20,4 |
| 70 | - | - | - | 23,2 | 23,3 | - | 21,4 | 21,6 | 21,7 | 20,1 | 20,3 | 20,4 | 18,4 | 18,6 | 18,8 |
| 71 | - | - | - | 22,5 | 22,6 | - | 20,7 | 20,9 | 21,0 | 19,4 | 19,6 | 19,7 | 17,7 | 17,9 | 18,1 |
| 73 | - | - | - | - | - | - | 19,4 | 19,5 | 19,7 | 18,0 | 18,2 | 18,3 | 16,3 | 16,5 | 16,7 |
| 74 | - | - | - | - | - | - | 18,8 | 18,9 | - | 17,4 | 17,6 | 17,7 | 15,7 | 15,9 | 16,1 |
| 76 | - | - | - | - | - | - | 17,6 | 17,7 | - | 16,2 | 16,4 | 16,5 | 14,5 | 14,7 | 14,8 |
| 78 | - | - | - | - | - | - | - | - | - | 15,1 | 15,2 | 15,3 | 13,3 | 13,5 | 13,6 |
| 81 | - | - | - | - | - | - | - | - | - | 13,5 | 13,6 | - | 11,7 | 11,9 | 12,0 |
| 82 | - | - | - | - | - | - | - | - | - | - | - | - | 11,2 | 11,4 | 11,5 |
| 83 | - | - | - | - | - | - | - | - | - | - | - | - | 10,7 | 10,9 | 11,0 |
| 86 | - | - | - | - | - | - | - | - | - | - | - | - | 9,4 | 9,5 | - |
| 87 | - | - | - | - | - | - | - | - | - | - | - | - | - | 9,1 | - |
| 90 | - | - | - | - | - | - | - | - | - | - | - | - | - | - | - |

autovictor

# SH/LH+LF2 LIFTING CAPACITIES · TRAGFÄHIGKEITEN · CAPACITÉS DE LEVAGE

200 t | 12 m | 14 m x 14 m | 360° | DIN/ISO

| | 66 m | | | 72 m | | | 78 m | | | | | |
|---|---|---|---|---|---|---|---|---|---|---|---|---|
| | SH/LH+LF2 | | | SH/LH+LF2 | | | SH/LH+ LF2 | SH/LH+LF2 SGLmax. | SH/LH+ LF2 | SH/LH+LF2 SGLmax. | SH/LH+ LF2 | SH/LH+LF2 SGLmax. |
| | 10° | 15° | 20° | 10° | 15° | 20° | 10° | | 15° | | 20° | |
| m | t | t | t | t | t | t | t | t | t | t | t | t |
| 12 | 125,0 | - | - | 125,0 | - | - | - | - | - | - | - | - |
| 13 | 125,0 | 111,0 | - | 125,0 | 107,0 | - | 116,0 | 125,0 | - | - | - | - |
| 14 | 125,0 | 107,0 | 83,0 | 125,0 | 107,0 | 79,5 | 116,0 | 125,0 | 101,0 | 122,0 | - | - |
| 15 | 125,0 | 103,0 | 80,5 | 125,0 | 103,0 | 79,5 | 114,0 | 125,0 | 101,0 | 118,0 | 78,0 | 91,0 |
| 16 | 125,0 | 99,5 | 78,0 | 125,0 | 100,0 | 77,5 | 112,0 | 125,0 | 99,5 | 114,0 | 78,0 | 88,5 |
| 18 | 121,0 | 93,5 | 74,0 | 120,0 | 94,5 | 74,0 | 109,0 | 125,0 | 95,0 | 107,0 | 74,5 | 84,5 |
| 20 | 112,0 | 87,5 | 70,0 | 114,0 | 89,5 | 71,0 | 106,0 | 122,0 | 91,0 | 101,0 | 71,5 | 80,5 |
| 22 | 104,0 | 82,5 | 67,0 | 109,0 | 85,0 | 67,5 | 104,0 | 115,0 | 86,5 | 96,5 | 68,5 | 77,0 |
| 24 | 98,0 | 78,5 | 64,0 | 102,0 | 81,0 | 65,5 | 99,5 | 106,0 | 83,0 | 91,5 | 66,0 | 74,0 |
| 26 | 92,0 | 74,5 | 61,0 | 96,0 | 77,0 | 63,0 | 95,5 | 97,0 | 79,5 | 87,5 | 64,0 | 71,0 |
| 28 | 86,5 | 70,5 | 58,5 | 91,0 | 73,5 | 60,5 | 91,5 | 89,0 | 76,0 | 83,5 | 62,0 | 68,0 |
| 30 | 82,0 | 67,5 | 56,0 | 86,0 | 70,0 | 58,0 | 87,5 | 81,5 | 72,5 | 80,0 | 59,5 | 65,5 |
| 34 | 74,0 | 62,0 | 52,0 | 78,0 | 64,5 | 54,0 | 79,0 | 68,0 | 67,0 | 73,5 | 55,5 | 61,5 |
| 38 | 67,5 | 57,0 | 49,0 | 68,0 | 59,5 | 50,5 | 67,5 | 57,0 | 61,5 | 67,0 | 52,0 | 57,5 |
| 42 | 58,5 | 53,0 | 46,0 | 58,0 | 55,5 | 47,7 | 57,5 | 48,8 | 56,0 | 57,0 | 49,2 | 53,5 |
| 46 | 50,5 | 50,0 | 43,5 | 50,0 | 50,5 | 45,1 | 49,6 | 42,4 | 50,0 | 49,2 | 46,6 | 48,0 |
| 50 | 44,4 | 44,7 | 41,3 | 43,7 | 44,0 | 42,8 | 43,1 | 38,4 | 43,4 | 42,6 | 43,7 | 42,2 |
| 54 | 39,1 | 39,3 | 39,4 | 38,3 | 38,6 | 38,8 | 37,7 | 36,0 | 38,0 | 36,3 | 38,2 | 36,5 |
| 58 | 34,6 | 34,8 | 34,9 | 33,8 | 34,0 | 34,2 | 33,2 | 32,1 | 33,4 | 32,5 | 33,7 | 32,7 |
| 62 | 30,8 | 30,9 | 31,1 | 29,9 | 30,1 | 30,3 | 29,1 | 28,0 | 29,4 | 28,3 | 29,6 | 28,5 |
| 66 | 27,4 | 27,5 | 27,6 | 26,4 | 26,6 | 26,8 | 25,6 | 24,5 | 25,8 | 24,7 | 26,0 | 24,9 |
| 68 | 25,9 | 26,0 | 26,1 | 24,9 | 25,0 | 25,2 | 24,1 | 22,9 | 24,3 | 23,1 | 24,4 | 23,3 |
| 70 | 24,4 | 24,5 | - | 23,4 | 23,5 | 23,7 | 22,6 | 21,4 | 22,8 | 21,6 | 22,9 | 21,8 |
| 71 | 23,7 | 23,8 | - | 22,7 | 22,8 | 23,0 | 21,9 | 20,7 | 22,1 | 20,9 | 22,2 | 21,1 |
| 73 | - | - | - | 21,4 | 21,5 | 21,6 | 20,5 | 19,3 | 20,7 | 19,5 | 20,8 | 19,7 |
| 74 | - | - | - | 20,8 | 20,9 | - | 19,9 | 18,7 | 20,1 | 18,9 | 20,2 | 19,0 |
| 76 | - | - | - | 19,6 | 19,7 | - | 18,7 | 17,5 | 18,9 | 17,7 | 19,0 | 17,8 |
| 77 | - | - | - | - | 19,1 | - | 18,1 | 16,9 | 18,3 | 17,1 | 18,4 | 17,2 |
| 78 | - | - | - | - | - | - | 17,6 | 16,4 | 17,7 | 16,5 | 17,8 | 16,6 |
| 81 | - | - | - | - | - | - | 16,0 | 14,8 | 16,1 | 14,9 | - | - |
| 82 | - | - | - | - | - | - | - | - | 15,6 | 14,4 | - | - |

**Remarks · Bemerkungen · Remarques**

For SH/LH+LF2 SGLmax. a boom power-kit is required
Für SH/LH+LF2 SGLmax. ist ein Ausleger-Verstärkungs-Kit erforderlich
Un kit à fortifier de flèche principale est nécessaire pour SH/LH+LF2 SGLmax.

# SH/LH+LF2 LIFTING CAPACITIES · TRAGFÄHIGKEITEN · CAPACITÉS DE LEVAGE

200 t | 12 m | 14 m x 14 m | 360° | DIN/ISO

| | 84 m | | | | | | 90 m | | | | | |
|---|---|---|---|---|---|---|---|---|---|---|---|---|
| | SH/LH+ LF2 | SH/LH+LF2 SGLmax. | SH/LH+ LF2 | SH/LH+LF2 SGLmax. | SH/LH+ LF2 | SH/LH+LF2 SGLmax. | SH/LH+ LF2 | SH/LH+LF2 SGLmax. | SH/LH+ LF2 | SH/LH+LF2 SGLmax. | SH/LH+ LF2 | SH/LH+LF2 SGLmax. |
| | 10° | | 15° | | 20° | | 10° | | 15° | | 20° | |
| m | t | t | t | t | t | t | t | t | t | t | t | t |
| 14 | 107,0 | 125,0 | - | - | - | - | 91,0 | 125,0 | - | - | - | - |
| 15 | 107,0 | 125,0 | 96,0 | 119,0 | 83,5 | - | 91,0 | 125,0 | 83,5 | 118,0 | - | - |
| 16 | 106,0 | 125,0 | 96,0 | 116,0 | 81,5 | 89,5 | 91,0 | 125,0 | 83,5 | 118,0 | 77,0 | 90,5 |
| 18 | 103,0 | 125,0 | 94,0 | 110,0 | 78,0 | 85,5 | 88,5 | 125,0 | 82,0 | 112,0 | 76,5 | 86,5 |
| 20 | 101,0 | 125,0 | 92,0 | 104,0 | 74,5 | 82,0 | 86,0 | 118,0 | 80,0 | 106,0 | 74,5 | 83,0 |
| 22 | 99,5 | 120,0 | 90,0 | 99,0 | 71,5 | 78,5 | 84,0 | 111,0 | 78,0 | 101,0 | 72,5 | 79,5 |
| 24 | 95,5 | 114,0 | 85,5 | 94,0 | 68,5 | 75,5 | 81,5 | 104,0 | 76,0 | 96,5 | 69,5 | 76,5 |
| 26 | 89,5 | 106,0 | 81,5 | 90,0 | 65,5 | 72,5 | 79,0 | 97,5 | 74,5 | 92,0 | 67,0 | 74,0 |
| 28 | 83,0 | 98,0 | 78,0 | 86,0 | 63,5 | 69,5 | 77,0 | 90,0 | 73,0 | 88,5 | 64,5 | 71,0 |
| 30 | 76,5 | 90,5 | 75,0 | 82,5 | 61,0 | 67,5 | 74,5 | 83,5 | 71,5 | 83,5 | 62,5 | 69,0 |
| 34 | 67,5 | 77,0 | 69,0 | 76,0 | 57,0 | 63,0 | 69,5 | 71,5 | 68,0 | 73,0 | 58,5 | 64,5 |
| 38 | 61,0 | 66,0 | 62,5 | 66,5 | 53,5 | 59,0 | 63,5 | 60,5 | 62,5 | 63,5 | 55,0 | 60,5 |
| 42 | 54,5 | 55,5 | 56,0 | 56,0 | 50,5 | 56,0 | 56,0 | 51,5 | 56,5 | 55,0 | 52,0 | 55,5 |
| 46 | 48,2 | 47,7 | 49,2 | 48,1 | 47,3 | 48,5 | 48,0 | 44,2 | 48,4 | 46,9 | 48,8 | 47,3 |
| 50 | 41,6 | 41,1 | 42,6 | 41,5 | 42,2 | 41,8 | 41,5 | 38,2 | 41,9 | 40,2 | 42,2 | 40,6 |
| 54 | 35,0 | 35,6 | 36,1 | 36,0 | 37,0 | 36,3 | 36,1 | 33,8 | 36,4 | 34,5 | 36,7 | 34,9 |
| 58 | 30,0 | 30,7 | 30,6 | 31,1 | 32,2 | 31,4 | 31,3 | 29,1 | 31,6 | 29,5 | 31,9 | 29,9 |
| 62 | 26,6 | 26,6 | 27,1 | 26,9 | 28,6 | 27,2 | 27,1 | 25,0 | 27,4 | 25,3 | 27,7 | 25,6 |
| 66 | 23,1 | 23,0 | 23,6 | 23,3 | 25,0 | 23,5 | 23,6 | 21,4 | 23,8 | 21,7 | 24,1 | 22,0 |
| 70 | 19,6 | 19,9 | 20,1 | 20,2 | 21,5 | 20,4 | 20,5 | 18,3 | 20,7 | 18,5 | 20,9 | 18,8 |
| 74 | 16,2 | 17,2 | 16,6 | 17,4 | 17,9 | 17,6 | 17,8 | 15,5 | 18,0 | 15,8 | 18,2 | 16,0 |
| 78 | 12,7 | 14,9 | 13,2 | 15,0 | 14,4 | 15,2 | 15,4 | 13,2 | 15,6 | 13,4 | 15,8 | 13,5 |
| 82 | 9,2 | 12,8 | 9,7 | 12,9 | 10,8 | 13,0 | 13,3 | 11,0 | 13,5 | 11,2 | 13,6 | 11,4 |
| 83 | 8,3 | 12,3 | 8,8 | 12,4 | 9,9 | 12,5 | 12,8 | 10,5 | 13,0 | 10,7 | 13,1 | 10,9 |
| 86 | 5,8 | 10,9 | 6,2 | 11,0 | - | - | 11,5 | 9,2 | 11,6 | 9,3 | 11,7 | 9,4 |
| 87 | 4,9 | 10,5 | 5,3 | 10,6 | - | - | 11,0 | 8,7 | 11,1 | 8,9 | 11,2 | 9,0 |
| 88 | - | - | - | - | - | - | 10,6 | 8,3 | 10,7 | 8,4 | 10,8 | 8,5 |
| 90 | - | - | - | - | - | - | 9,8 | 7,5 | 9,9 | 7,6 | - | - |
| 92 | - | - | - | - | - | - | 9,1 | 6,7 | 9,2 | 6,8 | - | - |

| | 96 m | | | | | | 102 m | | | | | |
|---|---|---|---|---|---|---|---|---|---|---|---|---|
| | SH/LH+ LF2 | SH/LH+LF2 SGLmax. | SH/LH+ LF2 | SH/LH+LF2 SGLmax. | SH/LH+ LF2 | SH/LH+LF2 SGLmax. | SH/LH+ LF2 | SH/LH+LF2 SGLmax. | SH/LH+ LF2 | SH/LH+LF2 SGLmax. | SH/LH+ LF2 | SH/LH+LF2 SGLmax. |
| | 10° | | 15° | | 20° | | 10° | | 15° | | 20° | |
| m | t | t | t | t | t | t | t | t | t | t | t | t |
| 15 | 86,5 | 116,0 | - | - | - | - | 72,5 | 109,0 | - | - | - | - |
| 16 | 86,5 | 116,0 | 80,0 | 109,0 | - | - | 72,5 | 109,0 | 67,0 | 104,0 | - | - |
| 17 | 85,5 | 114,5 | 80,0 | 109,0 | 73,5 | 88,0 | 72,5 | 109,0 | 67,0 | 104,0 | 62,0 | 88,5 |
| 18 | 84,5 | 113,0 | 79,0 | 109,0 | 73,5 | 87,5 | 71,5 | 109,0 | 67,0 | 104,0 | 62,0 | 88,5 |
| 20 | 82,5 | 109,0 | 77,0 | 105,0 | 72,0 | 84,0 | 69,5 | 105,0 | 65,5 | 102,0 | 61,5 | 85,0 |
| 22 | 80,5 | 105,0 | 75,5 | 101,0 | 70,5 | 81,0 | 67,5 | 101,0 | 63,5 | 99,0 | 60,0 | 82,0 |
| 24 | 78,5 | 101,0 | 74,0 | 96,5 | 69,5 | 78,0 | 66,0 | 96,5 | 62,0 | 96,0 | 58,5 | 79,0 |
| 26 | 76,5 | 97,0 | 72,0 | 92,5 | 68,0 | 75,0 | 64,0 | 92,5 | 60,5 | 92,5 | 57,5 | 76,5 |
| 28 | 73,0 | 91,0 | 70,0 | 88,0 | 66,0 | 72,5 | 62,5 | 88,0 | 59,0 | 89,5 | 56,0 | 74,0 |
| 30 | 70,0 | 84,5 | 68,0 | 83,0 | 63,5 | 70,0 | 61,0 | 82,0 | 58,0 | 84,5 | 55,0 | 71,5 |
| 34 | 63,5 | 73,5 | 63,5 | 74,0 | 59,5 | 66,0 | 58,0 | 71,0 | 55,5 | 73,5 | 53,0 | 67,0 |
| 38 | 58,0 | 63,0 | 58,5 | 64,5 | 56,0 | 62,0 | 55,0 | 61,5 | 53,0 | 63,5 | 50,5 | 63,5 |
| 42 | 53,0 | 53,5 | 53,5 | 54,0 | 53,0 | 54,5 | 50,5 | 52,5 | 49,3 | 53,0 | 47,5 | 53,5 |
| 46 | 47,2 | 45,6 | 47,7 | 46,1 | 48,1 | 46,6 | 46,6 | 44,4 | 45,4 | 44,9 | 44,0 | 45,4 |
| 50 | 40,7 | 38,9 | 41,1 | 39,4 | 41,5 | 39,8 | 40,0 | 37,4 | 40,4 | 37,9 | 40,4 | 38,4 |
| 54 | 35,1 | 33,0 | 35,5 | 33,5 | 35,9 | 33,9 | 34,3 | 31,5 | 34,7 | 32,0 | 35,1 | 32,5 |
| 58 | 30,3 | 28,1 | 30,6 | 28,5 | 31,0 | 28,9 | 29,4 | 26,6 | 29,8 | 27,0 | 30,2 | 27,4 |
| 62 | 26,1 | 24,0 | 26,4 | 24,3 | 26,7 | 24,6 | 25,2 | 22,4 | 25,6 | 22,8 | 25,9 | 23,1 |
| 66 | 22,6 | 20,4 | 22,8 | 20,7 | 23,1 | 21,0 | 21,7 | 18,7 | 22,0 | 19,1 | 22,3 | 19,4 |
| 67 | 21,8 | 19,6 | 22,0 | 19,9 | 22,3 | 20,2 | - | 17,9 | - | 18,3 | 21,4 | 18,6 |
| 70 | 19,5 | 17,2 | 19,7 | 17,5 | 19,9 | 17,8 | - | 15,6 | - | 15,9 | - | 16,2 |
| 74 | 16,7 | 14,5 | 17,0 | 14,7 | 17,2 | 15,0 | - | 12,8 | - | 13,1 | - | 13,4 |
| 78 | 14,4 | 12,1 | 14,6 | 12,3 | 14,7 | 12,5 | - | 10,4 | - | 10,7 | - | 10,9 |
| 82 | 12,2 | 9,9 | 12,4 | 10,1 | 12,6 | 10,3 | - | 8,3 | - | 8,5 | - | 8,7 |
| 86 | 10,4 | 8,0 | 10,5 | 8,2 | 10,7 | 8,4 | - | 6,3 | - | 6,5 | - | 6,7 |
| 90 | 8,7 | 6,3 | 8,8 | 6,5 | 8,9 | 6,6 | - | 4,6 | - | 4,8 | - | 5,0 |
| 92 | 7,9 | 5,5 | 8,0 | 5,7 | 8,1 | 5,8 | - | 3,8 | - | 4,0 | - | 4,2 |
| 93 | 7,5 | 5,1 | 7,6 | 5,3 | 7,8 | 5,4 | - | - | - | 3,6 | - | 3,8 |
| 94 | 7,2 | 4,8 | 7,3 | 5,0 | - | - | - | - | - | - | - | - |
| 97 | 6,2 | 3,8 | 6,3 | 3,9 | - | - | - | - | - | - | - | - |

# SSL+LF2, SSL/LSL+LF2 WORKING RANGES · ARBEITSBEREICHE · PORTÉES 10°

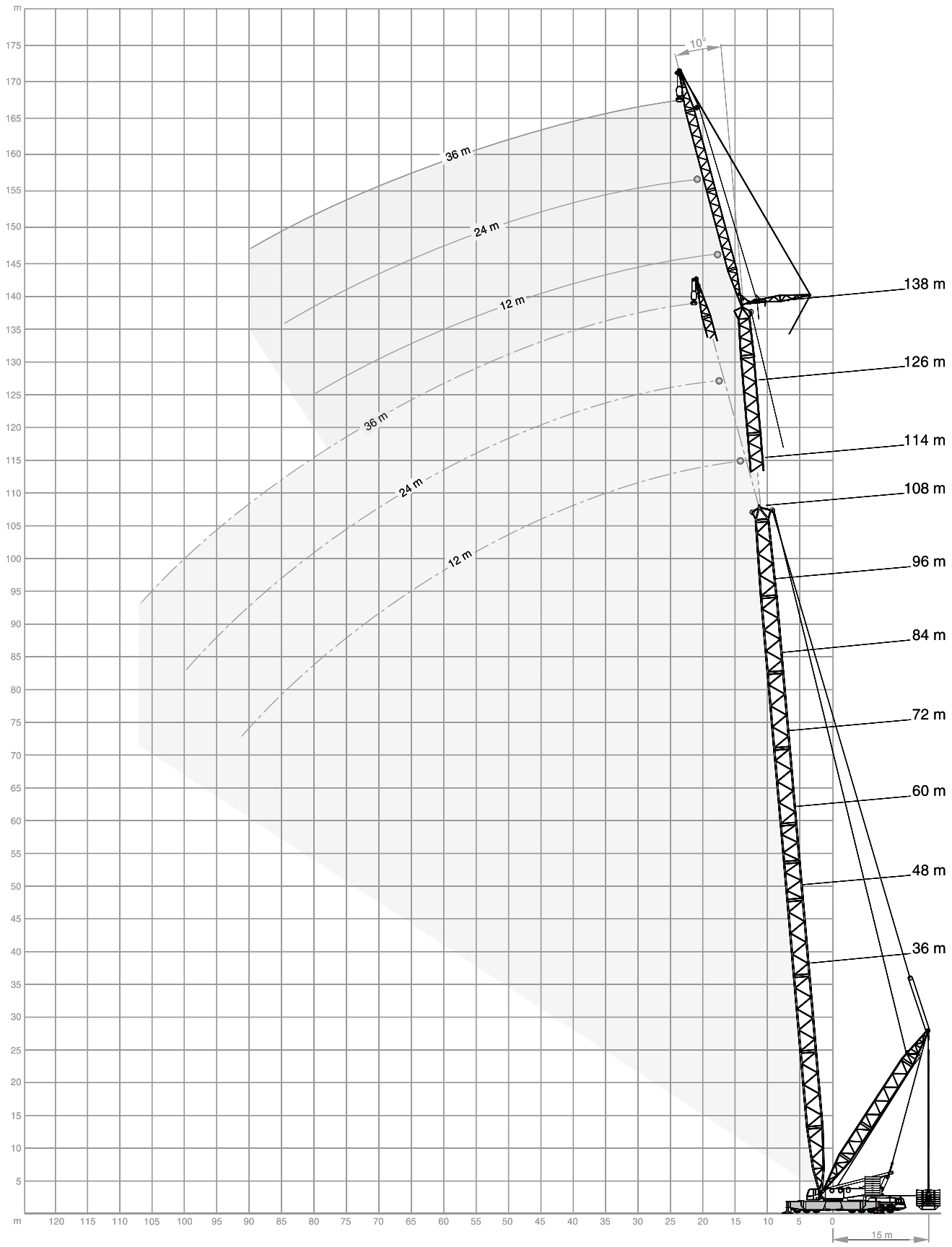

# SSL+LF2 LIFTING CAPACITIES · TRAGFÄHIGKEITEN · CAPACITÉS DE LEVAGE

160 t | 11-15 m | 0-300 t | 12 m | 14 m x 14 m | 360° | DIN/ISO

| | 42 m | | | 48 m | | | 54 m | | | | | |
|---|---|---|---|---|---|---|---|---|---|---|---|---|
| | SSL | | | SSL | | | SSL | HSSL | SSL | HSSL | SSL | HSSL |
| | 10° | 15° | 20° | 10° | 15° | 20° | 10° | | 15° | | 20° | |
| m | t | t | t | t | t | t | t | t | t | t | t | t |
| 10 | 125,0 | - | - | 125,0 | - | - | - | - | - | - | - | - |
| 11 | 125,0 | 109,0 | - | 125,0 | 112,0 | - | 125,0 | 125,0 | - | - | - | - |
| 12 | 125,0 | 103,0 | 81,5 | 125,0 | 106,0 | 83,5 | 125,0 | 125,0 | 109,0 | 109,0 | - | - |
| 13 | 125,0 | 98,0 | 78,5 | 125,0 | 102,0 | 80,5 | 125,0 | 125,0 | 105,0 | 104,5 | 82,0 | 82,0 |
| 14 | 120,0 | 93,5 | 75,5 | 125,0 | 97,5 | 77,5 | 125,0 | 125,0 | 100,0 | 100,0 | 79,0 | 79,0 |
| 16 | 108,0 | 85,5 | 70,0 | 114,0 | 89,5 | 72,0 | 120,0 | 121,0 | 93,0 | 93,0 | 74,0 | 74,0 |
| 18 | 98,0 | 79,0 | 65,0 | 104,0 | 83,0 | 67,5 | 110,0 | 110,0 | 86,5 | 86,5 | 70,0 | 70,0 |
| 20 | 89,5 | 73,5 | 61,0 | 95,5 | 77,0 | 63,5 | 101,0 | 102,0 | 80,5 | 80,5 | 66,0 | 66,0 |
| 22 | 82,5 | 68,5 | 57,5 | 88,5 | 72,5 | 60,0 | 94,0 | 94,5 | 76,0 | 76,0 | 62,5 | 62,5 |
| 24 | 76,5 | 64,0 | 54,5 | 82,5 | 68,0 | 57,0 | 87,5 | 88,0 | 71,5 | 71,5 | 59,5 | 59,5 |
| 26 | 71,5 | 60,5 | 51,5 | 77,0 | 64,0 | 54,0 | 82,0 | 82,0 | 67,5 | 67,5 | 56,5 | 56,5 |
| 28 | 67,0 | 57,0 | 49,4 | 72,0 | 60,5 | 51,5 | 77,0 | 77,5 | 64,0 | 64,0 | 54,0 | 54,0 |
| 30 | 63,0 | 54,0 | 47,2 | 68,0 | 57,5 | 49,7 | 72,5 | 73,0 | 61,0 | 61,0 | 52,0 | 52,0 |
| 34 | 56,5 | 49,5 | 43,4 | 61,0 | 52,5 | 45,8 | 65,5 | 66,0 | 55,5 | 56,0 | 48,0 | 48,2 |
| 38 | 51,0 | 45,5 | 40,4 | 55,5 | 48,5 | 42,6 | 59,5 | 59,8 | 51,0 | 51,6 | 44,7 | 44,8 |
| 42 | 47,2 | 42,2 | 37,9 | 51,0 | 45,0 | 40,0 | 54,5 | 54,5 | 47,8 | 47,8 | 42,0 | 42,0 |
| 46 | 43,7 | 39,6 | 36,0 | 47,2 | 42,2 | 37,8 | 50,5 | 50,8 | 44,7 | 44,8 | 39,6 | 39,7 |
| 48 | 42,3 | 38,6 | 35,2 | 45,6 | 41,0 | 36,9 | 48,8 | 49,0 | 43,4 | 43,3 | 38,6 | 38,6 |
| 50 | 41,0 | 37,6 | - | 44,1 | 39,8 | 36,1 | 47,2 | 47,4 | 42,1 | 42,2 | 37,7 | 37,7 |
| 53 | - | - | - | 42,1 | 38,3 | 35,0 | 45,1 | 45,1 | 40,5 | 40,5 | 36,5 | 36,5 |
| 54 | - | - | - | 41,5 | 37,9 | - | 44,4 | 44,4 | 40,0 | 40,0 | 36,1 | 36,1 |
| 55 | - | - | - | 41,0 | 37,5 | - | 43,8 | 43,8 | 39,5 | 39,5 | 35,8 | 35,8 |
| 58 | - | - | - | - | - | - | 42,0 | 42,1 | 38,2 | 38,3 | 34,9 | 34,9 |
| 60 | - | - | - | - | - | - | 40,9 | 41,0 | 37,5 | 37,5 | - | - |
| 61 | - | - | - | - | - | - | - | - | 37,2 | 37,2 | - | - |

| | 60 m | | | | | | 66 m | | | | | |
|---|---|---|---|---|---|---|---|---|---|---|---|---|
| | SSL | HSSL | SSL | HSSL | SSL | HSSL | SSL | HSSL | SSL | HSSL | SSL | HSSL |
| | 10° | | 15° | | 20° | | 10° | | 15° | | 20° | |
| m | t | t | t | t | t | t | t | t | t | t | t | t |
| 11 | 125,0 | 125,0 | - | - | - | - | - | - | - | - | - | - |
| 12 | 125,0 | 125,0 | 112,0 | 112,0 | - | - | 125,0 | 125,0 | - | - | - | - |
| 13 | 125,0 | 125,0 | 107,0 | 107,5 | 83,5 | 83,5 | 125,0 | 125,0 | 110,0 | 110,0 | - | - |
| 14 | 125,0 | 125,0 | 103,0 | 103,0 | 80,5 | 80,5 | 125,0 | 125,0 | 106,0 | 106,0 | 82,0 | 82,0 |
| 16 | 125,0 | 125,0 | 96,0 | 96,0 | 76,0 | 76,0 | 125,0 | 125,0 | 98,5 | 98,5 | 77,5 | 77,5 |
| 18 | 115,0 | 116,0 | 89,5 | 89,5 | 71,5 | 71,5 | 120,0 | 121,0 | 92,0 | 92,0 | 73,5 | 73,5 |
| 20 | 106,0 | 107,0 | 84,0 | 84,0 | 68,0 | 68,0 | 111,0 | 112,0 | 86,5 | 86,5 | 69,5 | 69,5 |
| 22 | 99,0 | 99,5 | 79,0 | 79,0 | 64,5 | 64,5 | 104,0 | 104,0 | 82,0 | 82,0 | 66,0 | 66,0 |
| 24 | 92,5 | 93,0 | 74,5 | 74,5 | 61,5 | 61,5 | 97,0 | 97,5 | 77,5 | 77,5 | 63,0 | 63,0 |
| 26 | 86,5 | 87,0 | 70,5 | 70,5 | 58,5 | 58,5 | 91,5 | 91,5 | 73,5 | 73,5 | 60,5 | 60,5 |
| 28 | 81,5 | 82,0 | 67,0 | 67,0 | 56,0 | 56,0 | 86,0 | 86,5 | 70,0 | 70,0 | 58,0 | 58,0 |
| 30 | 77,0 | 77,5 | 64,0 | 64,0 | 54,0 | 54,0 | 81,5 | 81,5 | 67,0 | 67,0 | 55,5 | 55,5 |
| 34 | 69,5 | 70,1 | 58,5 | 58,6 | 50,0 | 50,2 | 73,5 | 74,1 | 61,0 | 61,6 | 51,5 | 51,8 |
| 38 | 63,5 | 63,8 | 54,0 | 54,0 | 46,7 | 46,8 | 67,0 | 67,6 | 56,5 | 56,8 | 48,5 | 48,5 |
| 42 | 58,0 | 58,5 | 50,0 | 50,0 | 43,8 | 43,8 | 61,5 | 62,0 | 52,5 | 52,5 | 45,6 | 45,6 |
| 46 | 54,0 | 54,1 | 47,1 | 47,1 | 41,4 | 41,4 | 57,0 | 57,3 | 49,5 | 49,5 | 43,1 | 43,2 |
| 50 | 50,0 | 50,4 | 44,4 | 44,4 | 39,3 | 39,4 | 53,0 | 53,3 | 46,6 | 46,7 | 40,9 | 41,0 |
| 54 | 47,2 | 47,3 | 42,0 | 42,0 | 37,6 | 37,6 | 50,0 | 50,0 | 44,1 | 44,1 | 39,1 | 39,1 |
| 58 | 44,6 | 44,7 | 40,1 | 40,1 | 36,1 | 36,2 | 47,2 | 47,3 | 42,0 | 42,0 | 37,5 | 37,5 |
| 62 | 42,3 | 42,5 | 38,4 | 38,5 | 35,0 | 34,9 | 44,7 | 44,9 | 40,1 | 40,2 | 36,1 | 36,2 |
| 63 | 41,8 | 42,0 | 38,0 | 38,1 | 34,7 | 34,7 | 44,1 | 44,3 | 39,7 | 39,8 | 35,8 | 35,9 |
| 65 | 40,9 | 41,0 | 37,4 | 37,4 | - | - | 43,1 | 43,2 | 38,9 | 39,0 | 35,2 | 35,3 |
| 66 | - | - | 37,1 | 37,1 | - | - | 42,6 | 42,7 | 38,6 | 38,6 | 35,0 | 35,0 |
| 68 | - | - | - | - | - | - | 41,7 | 41,8 | 37,9 | 38,0 | 34,6 | 34,6 |
| 70 | - | - | - | - | - | - | 40,8 | 40,9 | 37,3 | 37,4 | - | - |
| 71 | - | - | - | - | - | - | 40,4 | 40,5 | 37,1 | 37,1 | - | - |
| 74 | - | - | - | - | - | - | - | - | - | - | - | - |

**Remarks · Bemerkungen · Remarques**

see page 28 · siehe Seite 28 · voir page 28

autovictor

# SSL+LF2 LIFTING CAPACITIES · TRAGFÄHIGKEITEN · CAPACITÉS DE LEVAGE

160 t | 11-15 m | 0-300 t | 12 m | 14 m x 14 m | 360° | DIN/ISO

| | 72 m | | | | | | 78 m | | | | | |
|---|---|---|---|---|---|---|---|---|---|---|---|---|
| | SSL | HSSL | SSL | HSSL | SSL | HSSL | SSL | HSSL | SSL | HSSL | SSL | HSSL |
| | 10° | | 15° | | 20° | | 10° | | 15° | | 20° | |
| m | t | t | t | t | t | t | t | t | t | t | t | t |
| 12 | 125,0 | 125,0 | - | - | - | - | - | - | - | - | - | - |
| 13 | 125,0 | 125,0 | 112,0 | 112,0 | - | - | 125,0 | 125,0 | - | - | - | - |
| 14 | 125,0 | 125,0 | 108,0 | 108,0 | 83,0 | 83,0 | 125,0 | 125,0 | 110,0 | 110,0 | - | - |
| 15 | 125,0 | 125,0 | 104,0 | 104,5 | 81,0 | 80,7 | 125,0 | 125,0 | 106,0 | 106,5 | 82,0 | 82,0 |
| 16 | 125,0 | 125,0 | 101,0 | 101,0 | 78,5 | 78,5 | 125,0 | 125,0 | 103,0 | 103,0 | 80,0 | 80,0 |
| 18 | 125,0 | 124,0 | 95,0 | 95,0 | 74,5 | 74,5 | 125,0 | 124,0 | 97,0 | 97,0 | 76,0 | 76,0 |
| 20 | 116,0 | 116,0 | 89,5 | 89,5 | 71,0 | 71,0 | 120,0 | 121,0 | 91,5 | 91,5 | 72,5 | 72,5 |
| 22 | 108,0 | 109,0 | 84,5 | 84,5 | 68,0 | 68,0 | 112,0 | 113,0 | 87,0 | 87,0 | 69,5 | 69,5 |
| 24 | 101,0 | 102,0 | 80,0 | 80,0 | 65,0 | 65,0 | 105,0 | 106,0 | 82,5 | 82,5 | 66,5 | 66,5 |
| 26 | 95,5 | 96,0 | 76,0 | 76,0 | 62,0 | 62,0 | 99,5 | 100,0 | 78,5 | 78,5 | 63,5 | 63,5 |
| 28 | 90,0 | 90,5 | 72,5 | 72,5 | 59,5 | 59,5 | 94,0 | 94,5 | 75,0 | 75,0 | 61,5 | 61,5 |
| 30 | 85,5 | 85,5 | 69,5 | 69,5 | 57,5 | 57,5 | 89,5 | 89,5 | 72,0 | 72,0 | 59,0 | 59,0 |
| 34 | 77,5 | 77,8 | 63,5 | 64,1 | 53,5 | 53,5 | 81,0 | 81,5 | 66,0 | 66,3 | 55,0 | 55,0 |
| 38 | 70,5 | 71,0 | 59,0 | 59,3 | 50,0 | 50,0 | 74,0 | 74,5 | 61,5 | 61,3 | 51,5 | 51,6 |
| 42 | 65,0 | 65,0 | 55,0 | 55,0 | 47,2 | 47,2 | 68,0 | 68,5 | 57,0 | 57,0 | 48,8 | 48,8 |
| 46 | 60,0 | 60,3 | 51,5 | 51,6 | 44,7 | 44,7 | 63,0 | 63,5 | 53,5 | 53,6 | 46,2 | 46,2 |
| 50 | 56,0 | 56,1 | 48,7 | 48,7 | 42,4 | 42,5 | 59,0 | 59,1 | 50,5 | 50,6 | 43,9 | 43,9 |
| 54 | 52,5 | 52,5 | 46,1 | 46,1 | 40,5 | 40,5 | 55,5 | 55,5 | 48,0 | 48,0 | 41,9 | 41,9 |
| 58 | 49,8 | 49,8 | 43,8 | 43,9 | 38,8 | 38,8 | 52,0 | 52,5 | 45,7 | 45,7 | 40,1 | 40,1 |
| 62 | 47,1 | 47,3 | 41,9 | 41,9 | 37,3 | 37,3 | 49,5 | 49,7 | 43,6 | 43,6 | 38,6 | 38,6 |
| 66 | 44,8 | 44,9 | 40,2 | 40,2 | 36,1 | 36,1 | 47,1 | 47,2 | 41,8 | 41,8 | 37,2 | 37,2 |
| 70 | 42,9 | 42,9 | 38,7 | 38,8 | 35,1 | 35,1 | 44,9 | 45,0 | 40,2 | 40,2 | 36,1 | 36,1 |
| 73 | 41,6 | 41,6 | 37,8 | 37,8 | 34,5 | 34,5 | 43,5 | 43,5 | 39,1 | 39,2 | 35,3 | 35,3 |
| 74 | 41,2 | 41,2 | 37,5 | 37,5 | - | - | 43,1 | 43,1 | 38,8 | 38,9 | 35,1 | 35,1 |
| 76 | 40,4 | 40,5 | 37,0 | 37,0 | - | - | 42,2 | 42,3 | 38,2 | 38,3 | 34,7 | 34,7 |
| 78 | - | - | - | - | - | - | 41,4 | 41,5 | 37,7 | 37,7 | 34,3 | 34,3 |
| 81 | - | - | - | - | - | - | 40,4 | 40,4 | 36,9 | 36,9 | - | - |

**Remarks · Bemerkungen · Remarques**

SSL+LF2:

Max. capacities with minimum counterweight · Maximale Tragfähigkeiten bei Mindestgegengewicht · Capacités maximales avec contrepoids minimum.

For HSSL+LF2 a boom power-kit is required
Für HSSL+LF2 ist ein Ausleger-Verstärkungs-Kit erforderlich
Un kit à fortifier de flèche principale est nécessaire pour HSSL+LF2

# SSL+LF2 LIFTING CAPACITIES · TRAGFÄHIGKEITEN · CAPACITÉS DE LEVAGE

160 t | 11-15 m | 0-300 t | 12 m | 14 m x 14 m | 360° | DIN/ISO

| | 84 m | | | | | | 90 m | | | 96 m | | |
|---|---|---|---|---|---|---|---|---|---|---|---|---|
| | SSL | HSSL | SSL | HSSL | SSL | HSSL | HSSL | | | HSSL | | |
| | 10° | | 15° | | 20° | | 10° | 15° | 20° | 10° | 15° | 20° |
| m | t | t | t | t | t | t | t | t | t | t | t | t |
| 13 | 125,0 | 125,0 | - | - | - | - | - | - | - | - | - | - |
| 14 | 125,0 | 125,0 | 112,0 | 112,0 | - | - | 125,0 | 125,0 | - | - | - | - |
| 15 | 125,0 | 125,0 | 108,0 | 108,5 | 83,0 | 83,0 | 125,0 | 125,0 | 110,0 | 111,0 | - | - |
| 16 | 125,0 | 125,0 | 105,0 | 105,0 | 81,0 | 81,0 | 125,0 | 125,0 | 107,0 | 108,0 | 82,5 | 82,5 |
| 18 | 125,0 | 125,0 | 99,0 | 99,0 | 77,0 | 77,0 | 125,0 | 125,0 | 101,0 | 103,0 | 79,0 | 79,0 |
| 20 | 124,0 | 123,0 | 94,0 | 94,0 | 74,0 | 74,0 | 124,0 | 124,0 | 96,0 | 97,5 | 76,0 | 76,0 |
| 22 | 116,0 | 117,0 | 89,0 | 89,0 | 70,5 | 70,5 | 121,0 | 121,0 | 91,0 | 93,0 | 73,0 | 73,0 |
| 24 | 109,0 | 110,0 | 85,0 | 85,0 | 68,0 | 68,0 | 114,0 | 114,0 | 87,0 | 89,0 | 70,0 | 70,0 |
| 26 | 103,0 | 104,0 | 81,0 | 81,0 | 65,0 | 65,0 | 107,0 | 107,0 | 83,0 | 85,0 | 67,5 | 67,5 |
| 28 | 98,0 | 98,5 | 77,5 | 77,5 | 62,5 | 62,5 | 102,0 | 102,0 | 79,5 | 81,5 | 65,5 | 65,5 |
| 30 | 93,0 | 93,5 | 74,0 | 74,0 | 60,5 | 60,5 | 97,0 | 97,0 | 76,0 | 78,0 | 63,0 | 63,0 |
| 34 | 84,5 | 85,1 | 68,5 | 68,6 | 56,5 | 56,5 | 88,3 | 88,3 | 70,6 | 72,6 | 59,3 | 59,3 |
| 38 | 77,5 | 77,8 | 63,5 | 63,8 | 53,0 | 53,0 | 80,8 | 80,8 | 65,8 | 67,6 | 55,8 | 55,8 |
| 42 | 71,5 | 71,5 | 59,5 | 59,5 | 50,0 | 50,0 | 74,5 | 74,5 | 61,5 | 63,0 | 52,5 | 52,5 |
| 46 | 66,0 | 66,5 | 55,5 | 55,8 | 47,6 | 47,6 | 69,5 | 69,5 | 57,8 | 59,6 | 50,1 | 50,1 |
| 50 | 62,0 | 62,0 | 52,5 | 52,6 | 45,3 | 45,3 | 64,8 | 64,8 | 54,5 | 56,3 | 47,9 | 47,9 |
| 54 | 58,0 | 58,0 | 49,9 | 49,9 | 43,2 | 43,2 | 60,5 | 60,5 | 51,5 | 53,0 | 45,7 | 45,7 |
| 58 | 54,5 | 54,6 | 47,4 | 47,5 | 41,4 | 41,4 | 57,1 | 57,1 | 49,1 | 50,7 | 43,8 | 43,8 |
| 62 | 51,5 | 51,8 | 45,3 | 45,3 | 39,8 | 39,7 | 54,1 | 54,1 | 46,9 | 48,5 | 42,1 | 42,1 |
| 66 | 49,3 | 49,4 | 43,4 | 43,4 | 38,3 | 38,3 | 51,5 | 51,5 | 44,9 | 46,4 | 40,5 | 40,5 |
| 70 | 47,0 | 47,2 | 41,7 | 41,7 | 37,1 | 37,1 | 49,2 | 49,2 | 43,1 | 44,6 | 39,1 | 39,1 |
| 74 | 45,0 | 45,1 | 40,2 | 40,2 | 36,0 | 36,0 | 47,1 | 47,1 | 41,5 | 42,9 | 37,9 | 37,9 |
| 78 | 43,2 | 43,3 | 38,9 | 38,9 | 35,1 | 35,1 | 45,1 | 45,1 | 40,1 | 41,4 | 36,8 | 36,8 |
| 82 | 41,7 | 41,0 | 37,8 | 37,8 | 34,4 | 34,3 | 42,1 | 42,1 | 38,9 | 39,6 | 35,9 | 35,9 |
| 83 | 41,2 | 40,4 | 37,5 | 37,5 | 34,2 | 34,2 | 41,3 | 41,3 | 38,6 | 39,2 | 35,7 | 35,7 |
| 86 | 39,7 | 38,3 | 36,9 | 36,9 | - | - | 38,9 | 38,9 | 37,2 | 36,9 | 34,4 | 34,4 |
| 87 | - | - | 36,7 | 36,7 | - | - | 38,0 | 38,0 | 36,6 | 36,1 | 33,8 | 33,8 |
| 90 | - | - | - | - | - | - | 35,5 | 35,5 | 34,8 | 33,9 | 32,2 | 32,2 |
| 91 | - | - | - | - | - | - | 34,6 | 34,6 | 34,2 | 33,1 | 31,6 | 31,6 |
| 92 | - | - | - | - | - | - | - | - | 33,7 | 32,3 | 31,1 | 31,1 |
| 94 | - | - | - | - | - | - | - | - | - | 30,8 | - | - |
| 97 | - | - | - | - | - | - | - | - | - | 28,6 | - | - |
| 98 | - | - | - | - | - | - | - | - | - | - | - | - |

**Remarks · Bemerkungen · Remarques**

SSL+LF2:
Max. capacities with minimum counterweight · Maximale Tragfähigkeiten bei Mindestgegengewicht · Capacités maximales avec contrepoids minimum.

For HSSL+LF2 a boom power-kit is required
Für HSSL+LF2 ist ein Ausleger-Verstärkungs-Kit erforderlich
Un kit à fortifier de flèche principale est nécessaire pour HSSL+LF2

autovictor

# SSL+LF2 LIFTING CAPACITIES · TRAGFÄHIGKEITEN · CAPACITÉS DE LEVAGE

160 t | 11-15 m | 0-300 t | 12 m | 14 m x 14 m | 360° | DIN/ISO

| | 102 m | | | 108 m | | |
|---|---|---|---|---|---|---|
| | HSSL | | | HSSL | | |
| | 10° | 15° | 20° | 10° | 15° | 20° |
| m | t | t | t | t | t | t |
| 15 | 125,0 | 125,0 | - | - | - | - |
| 16 | 125,0 | 125,0 | 110,0 | 111,0 | - | - |
| 17 | 125,0 | 125,0 | 107,0 | 108,5 | 82,5 | 82,5 |
| 18 | 125,0 | 125,0 | 104,0 | 106,0 | 81,0 | 81,0 |
| 20 | 125,0 | 125,0 | 99,5 | 101,0 | 77,5 | 77,5 |
| 22 | 125,0 | 125,0 | 95,0 | 96,5 | 75,0 | 75,0 |
| 24 | 120,0 | 120,0 | 90,5 | 92,5 | 72,0 | 72,0 |
| 26 | 114,0 | 114,0 | 87,0 | 88,5 | 70,0 | 70,0 |
| 28 | 108,0 | 108,0 | 83,5 | 85,0 | 67,5 | 67,5 |
| 30 | 103,0 | 103,0 | 80,0 | 82,0 | 65,5 | 65,5 |
| 34 | 94,6 | 94,6 | 74,3 | 76,3 | 61,5 | 61,5 |
| 38 | 87,1 | 87,1 | 69,3 | 71,1 | 58,0 | 58,0 |
| 42 | 80,5 | 80,5 | 65,0 | 66,5 | 55,0 | 55,0 |
| 46 | 74,8 | 74,8 | 61,3 | 62,8 | 52,3 | 52,3 |
| 50 | 69,8 | 69,8 | 58,0 | 59,5 | 49,9 | 49,9 |
| 54 | 65,5 | 65,5 | 55,0 | 56,5 | 47,9 | 47,9 |
| 58 | 61,8 | 61,8 | 52,3 | 53,8 | 45,9 | 45,9 |
| 62 | 58,5 | 58,5 | 49,9 | 51,4 | 44,2 | 44,2 |
| 66 | 55,5 | 55,5 | 47,9 | 49,4 | 42,6 | 42,6 |
| 70 | 53,1 | 53,1 | 46,0 | 47,4 | 41,1 | 41,1 |
| 74 | 50,8 | 50,8 | 44,3 | 45,6 | 39,8 | 39,8 |
| 78 | 48,5 | 48,5 | 42,7 | 44,0 | 38,6 | 38,6 |
| 82 | 44,7 | 44,7 | 41,3 | 42,5 | 37,5 | 37,5 |
| 86 | 40,8 | 40,8 | 38,3 | 40,0 | 35,7 | 35,7 |
| 90 | 37,0 | 37,0 | 35,1 | 36,6 | 33,2 | 33,2 |
| 94 | 33,1 | 33,1 | 31,9 | 33,1 | 30,4 | 30,4 |
| 98 | 29,3 | 29,3 | 28,6 | 29,6 | 27,7 | 27,7 |
| 102 | 25,5 | 25,5 | 25,4 | 26,2 | 24,9 | 24,9 |
| 106 | - | - | - | 22,6 | - | - |
| 107 | - | - | - | 21,8 | - | - |
| 110 | - | - | - | - | - | - |

**Remarks · Bemerkungen · Remarques**

SSL+LF2:

Max. capacities with minimum counterweight · Maximale Tragfähigkeiten bei Mindestgegengewicht · Capacités maximales avec contrepoids minimum.

For HSSL+LF2 a boom power-kit is required
Für HSSL+LF2 ist ein Ausleger-Verstärkungs-Kit erforderlich
Un kit à fortifier de flèche principale est nécessaire pour HSSL+LF2

# SSL/LSL+LF2 LIFTING CAPACITIES · TRAGFÄHIGKEITEN · CAPACITÉS DE LEVAGE

160 t | 11-15 m | 0-300 t | 12 m | 14 m x 14 m | 360° | DIN/ISO

| | 90 m | | | | | | 96 m | | | | | |
|---|---|---|---|---|---|---|---|---|---|---|---|---|
| | SSL/LSL+ LF2 | SSL/LSL+LF2 SGLmax. | SSL/LSL+ LF2 | SSL/LSL+LF2 SGLmax. | SSL/LSL+ LF2 | SSL/LSL+LF2 SGLmax. | SSL/LSL+ LF2 | SSL/LSL+LF2 SGLmax. | SSL/LSL+ LF2 | SSL/LSL+LF2 SGLmax. | SSL/LSL+ LF2 | SSL/LSL+LF2 SGLmax. |
| | 10° | | 15° | | 20° | | 10° | | 15° | | 20° | |
| m | t | t | t | t | t | t | t | t | t | t | t | t |
| 14 | 125,0 | 125,0 | - | - | - | - | - | - | - | - | - | - |
| 15 | 125,0 | 125,0 | 111,0 | 122,0 | - | - | 125,0 | 125,0 | - | - | - | - |
| 16 | 125,0 | 125,0 | 108,0 | 118,0 | 82,5 | 90,5 | 125,0 | 125,0 | 109,0 | 120,0 | - | - |
| 17 | 125,0 | 125,0 | 105,0 | 115,0 | 80,7 | 88,5 | 124,0 | 125,0 | 106,5 | 117,0 | 81,5 | 89,5 |
| 18 | 125,0 | 125,0 | 102,0 | 112,0 | 79,0 | 86,5 | 123,0 | 125,0 | 104,0 | 114,0 | 80,0 | 87,5 |
| 20 | 125,0 | 125,0 | 97,0 | 106,0 | 75,5 | 83,0 | 121,0 | 125,0 | 98,5 | 108,0 | 76,5 | 84,0 |
| 22 | 121,0 | 125,0 | 92,0 | 101,0 | 72,5 | 79,5 | 119,0 | 125,0 | 94,0 | 103,0 | 73,5 | 81,0 |
| 24 | 114,0 | 120,0 | 88,0 | 96,5 | 69,5 | 76,5 | 117,0 | 123,0 | 89,5 | 98,5 | 71,0 | 78,0 |
| 26 | 107,0 | 113,0 | 84,0 | 92,0 | 67,0 | 74,0 | 111,0 | 117,0 | 86,0 | 94,5 | 68,0 | 75,0 |
| 28 | 102,0 | 107,0 | 80,5 | 88,5 | 64,5 | 71,0 | 105,0 | 111,0 | 82,5 | 90,5 | 66,0 | 72,5 |
| 30 | 97,0 | 102,0 | 77,0 | 84,5 | 62,5 | 69,0 | 100,0 | 105,0 | 79,0 | 87,0 | 63,5 | 70,0 |
| 34 | 88,6 | 93,6 | 71,3 | 78,5 | 58,5 | 64,6 | 91,6 | 96,6 | 73,3 | 81,0 | 59,8 | 66,0 |
| 38 | 81,3 | 86,0 | 66,3 | 73,1 | 55,0 | 60,8 | 84,1 | 89,0 | 68,3 | 75,5 | 56,3 | 62,1 |
| 42 | 75,0 | 79,0 | 62,0 | 68,5 | 52,0 | 57,5 | 77,5 | 82,0 | 64,0 | 70,5 | 53,0 | 58,5 |
| 46 | 69,6 | 73,6 | 58,3 | 64,5 | 49,4 | 54,5 | 72,5 | 76,6 | 60,3 | 66,5 | 50,6 | 55,8 |
| 50 | 65,0 | 68,8 | 55,0 | 60,8 | 47,0 | 51,8 | 67,8 | 71,8 | 57,0 | 62,8 | 48,2 | 53,1 |
| 54 | 61,0 | 64,5 | 52,0 | 57,5 | 44,8 | 49,6 | 63,5 | 67,5 | 54,0 | 59,5 | 46,0 | 50,5 |
| 58 | 57,6 | 61,1 | 49,6 | 54,8 | 43,0 | 47,6 | 59,8 | 63,8 | 51,3 | 56,5 | 44,1 | 48,7 |
| 62 | 54,5 | 58,0 | 47,4 | 52,3 | 41,3 | 45,7 | 56,6 | 60,3 | 48,9 | 53,8 | 42,4 | 47,0 |
| 66 | 51,5 | 55,0 | 45,3 | 50,0 | 39,8 | 44,1 | 54,0 | 57,0 | 46,9 | 51,5 | 40,8 | 45,3 |
| 70 | 49,4 | 52,3 | 43,5 | 48,2 | 38,4 | 42,7 | 51,3 | 54,6 | 45,0 | 49,7 | 39,4 | 43,8 |
| 74 | 47,4 | 50,0 | 41,9 | 46,5 | 37,2 | 41,4 | 49,0 | 52,3 | 43,3 | 48,0 | 38,2 | 42,4 |
| 78 | 45,4 | 48,2 | 40,5 | 44,9 | 36,2 | 40,2 | 47,2 | 50,0 | 41,8 | 46,3 | 37,1 | 41,2 |
| 82 | 43,7 | 45,2 | 39,3 | 43,1 | 35,4 | 39,2 | 45,3 | 46,8 | 40,5 | 44,1 | 36,1 | 40,2 |
| 86 | 41,6 | 42,1 | 38,2 | 40,9 | 34,6 | 38,4 | 42,8 | 43,4 | 39,1 | 41,5 | 35,3 | 38,7 |
| 88 | 40,3 | 40,4 | 37,7 | 39,5 | 34,3 | 38,1 | 41,2 | 41,6 | 38,3 | 40,0 | 34,9 | 37,7 |
| 90 | 39,1 | 38,7 | 37,3 | 38,2 | - | - | 39,6 | 39,7 | 37,6 | 38,5 | 34,6 | 36,6 |
| 92 | 37,5 | - | 36,9 | - | - | - | 38,0 | 37,9 | 36,4 | 37,0 | 34,3 | 35,5 |
| 93 | - | - | - | - | - | - | 37,2 | 37,0 | 35,9 | 36,2 | 34,2 | 35,0 |
| 94 | - | - | - | - | - | - | 36,4 | 36,1 | 35,3 | 35,5 | - | - |
| 97 | - | - | - | - | - | - | 34,0 | - | 33,7 | - | - | - |

**Remarks · Bemerkungen · Remarques**

SSL/LSL+LF2:
Max. capacities with minimum counterweight · Maximale Tragfähigkeiten bei Mindestgegengewicht · Capacités maximales avec contrepoids minimum.

For SSL/LSL+LF2 SGLmax. a boom power-kit is required
Für SSL/LSL+LF2 SGLmax. ist ein Ausleger-Verstärkungs-Kit erforderlich
Un kit à fortifier de flèche principale est nécessaire pour SSL/LSL+LF2 SGLmax.

# SSL/LSL+LF2 LIFTING CAPACITIES · TRAGFÄHIGKEITEN · CAPACITÉS DE LEVAGE

160 t | 11-15 m | 0-300 t | 12 m | 14 m x 14 m | 360° | DIN/ISO

| | 102 m | | | | | | 108 m | | | | | |
|---|---|---|---|---|---|---|---|---|---|---|---|---|
| | SSL/LSL+ LF2 | SSL/LSL+LF2 SGLmax. | SSL/LSL+ LF2 | SSL/LSL+LF2 SGLmax. | SSL/LSL+ LF2 | SSL/LSL+LF2 SGLmax. | SSL/LSL+ LF2 | SSL/LSL+LF2 SGLmax. | SSL/LSL+ LF2 | SSL/LSL+LF2 SGLmax. | SSL/LSL+ LF2 | SSL/LSL+LF2 SGLmax. |
| | 10° | | 15° | | 20° | | 10° | | 15° | | 20° | |
| m | t | t | t | t | t | t | t | t | t | t | t | t |
| 15 | 109,0 | 125,0 | - | - | - | - | - | - | - | - | - | - |
| 16 | 109,0 | 125,0 | 99,0 | 122,0 | - | - | 94,5 | 124,0 | - | - | - | - |
| 17 | 108,0 | 125,0 | 98,5 | 118,5 | 81,5 | 90,5 | 94,0 | 124,0 | 87,0 | 120,0 | - | - |
| 18 | 107,0 | 125,0 | 98,0 | 115,0 | 80,5 | 88,5 | 93,5 | 124,0 | 87,0 | 117,0 | 79,5 | 89,5 |
| 20 | 105,0 | 125,0 | 96,0 | 110,0 | 77,5 | 85,0 | 91,5 | 123,0 | 85,0 | 112,0 | 78,5 | 86,0 |
| 22 | 103,0 | 125,0 | 94,0 | 105,0 | 74,5 | 82,0 | 89,5 | 122,0 | 83,0 | 107,0 | 75,5 | 83,0 |
| 24 | 101,0 | 125,0 | 91,5 | 100,0 | 72,0 | 79,0 | 87,0 | 121,0 | 81,0 | 102,0 | 73,0 | 80,0 |
| 26 | 99,0 | 120,0 | 87,5 | 96,5 | 69,5 | 76,5 | 84,5 | 120,0 | 78,5 | 98,5 | 70,5 | 77,5 |
| 28 | 96,5 | 114,0 | 84,0 | 92,5 | 67,0 | 74,0 | 82,0 | 117,0 | 76,5 | 94,5 | 68,0 | 75,0 |
| 30 | 94,0 | 109,0 | 81,0 | 89,0 | 65,0 | 71,5 | 80,0 | 112,0 | 74,5 | 91,0 | 66,0 | 72,5 |
| 34 | 89,3 | 100,0 | 75,3 | 83,0 | 61,0 | 67,1 | 75,3 | 103,0 | 70,5 | 85,0 | 62,0 | 68,5 |
| 38 | 84,8 | 92,0 | 70,1 | 77,5 | 57,5 | 63,3 | 71,3 | 95,0 | 67,0 | 79,5 | 58,5 | 64,8 |
| 42 | 80,5 | 85,0 | 65,5 | 72,5 | 54,5 | 60,0 | 68,0 | 88,0 | 64,0 | 74,5 | 55,5 | 61,5 |
| 46 | 75,1 | 79,3 | 61,8 | 68,5 | 51,8 | 57,0 | 64,6 | 82,3 | 61,3 | 70,1 | 52,8 | 58,5 |
| 50 | 70,3 | 74,3 | 58,5 | 64,6 | 49,4 | 54,3 | 61,5 | 77,0 | 58,6 | 66,3 | 50,4 | 55,6 |
| 54 | 66,0 | 70,0 | 55,5 | 61,0 | 47,2 | 52,0 | 58,5 | 72,0 | 56,0 | 63,0 | 48,3 | 53,0 |
| 58 | 62,3 | 66,0 | 52,8 | 58,3 | 45,2 | 50,0 | 55,5 | 68,0 | 53,3 | 60,0 | 46,3 | 51,0 |
| 62 | 59,0 | 62,5 | 50,4 | 55,8 | 43,5 | 48,2 | 52,6 | 64,5 | 50,7 | 57,3 | 44,5 | 49,1 |
| 66 | 56,0 | 59,5 | 48,4 | 53,5 | 41,9 | 46,4 | 49,8 | 61,5 | 48,3 | 55,0 | 42,9 | 47,5 |
| 70 | 53,3 | 56,8 | 46,4 | 51,1 | 40,5 | 44,8 | 47,1 | 58,8 | 45,9 | 52,6 | 41,4 | 45,9 |
| 74 | 51,0 | 54,3 | 44,7 | 49,2 | 39,2 | 43,4 | 44,6 | 55,6 | 43,6 | 50,7 | 40,1 | 44,5 |
| 78 | 49,0 | 52,0 | 43,1 | 47,7 | 38,0 | 42,2 | 42,2 | 52,0 | 41,6 | 49,2 | 38,9 | 43,2 |
| 82 | 45,8 | 48,8 | 41,1 | 45,3 | 37,0 | 40,8 | 39,8 | 48,4 | 39,4 | 46,4 | 37,8 | 41,4 |
| 86 | 42,4 | 45,1 | 38,8 | 42,5 | 36,0 | 38,8 | 37,5 | 44,8 | 37,3 | 43,0 | 36,6 | 38,8 |
| 90 | 39,0 | 41,3 | 36,2 | 39,2 | 34,7 | 36,4 | 35,2 | 41,1 | 35,3 | 39,6 | 34,7 | 36,2 |
| 94 | 35,5 | 37,3 | 33,6 | 35,9 | 32,9 | 33,9 | 32,8 | 37,3 | 33,2 | 36,2 | 32,7 | 33,5 |
| 98 | 32,0 | 33,4 | 30,9 | 32,6 | 31,2 | 31,5 | 30,4 | 33,6 | 31,1 | 32,8 | 30,8 | 30,9 |
| 102 | 28,6 | 29,5 | 28,3 | 29,4 | - | - | 28,1 | 29,9 | 29,1 | 29,4 | 28,9 | 28,2 |
| 103 | - | - | - | - | - | - | 27,5 | 28,9 | 28,6 | 28,5 | 28,4 | 27,5 |
| 106 | - | - | - | - | - | - | 25,7 | 26,1 | 27,0 | 26,1 | - | - |
| 107 | - | - | - | - | - | - | 25,2 | - | 26,5 | - | - | - |
| 108 | - | - | - | - | - | - | - | - | 26,0 | - | - | - |
| 110 | - | - | - | - | - | - | - | - | - | - | - | - |

**Remarks · Bemerkungen · Remarques**

SSL/LSL+LF2:
Max. capacities with minimum counterweight · Maximale Tragfähigkeiten bei Mindestgegengewicht · Capacités maximales avec contrepoids minimum.

For SSL/LSL+LF2 SGLmax. a boom power-kit is required
Für SSL/LSL+LF2 SGLmax. ist ein Ausleger-Verstärkungs-Kit erforderlich
Un kit à fortifier de flèche principale est nécessaire pour SSL/LSL+LF2 SGLmax.

# SSL/LSL+LF2 LIFTING CAPACITIES · TRAGFÄHIGKEITEN · CAPACITÉS DE LEVAGE

160 t | 11-15 m | 0-300 t | 12 m | 14 m x 14 m | 360° | DIN/ISO

| | 114 m | | | | | | 120 m | | | | | |
|---|---|---|---|---|---|---|---|---|---|---|---|---|
| | SSL/LSL+ LF2 | SSL/LSL+LF2 SGLmax. | SSL/LSL+ LF2 | SSL/LSL+LF2 SGLmax. | SSL/LSL+ LF2 | SSL/LSL+LF2 SGLmax. | SSL/LSL+ LF2 | SSL/LSL+LF2 SGLmax. | SSL/LSL+ LF2 | SSL/LSL+LF2 SGLmax. | SSL/LSL+ LF2 | SSL/LSL+LF2 SGLmax. |
| | 10° | | 15° | | 20° | | 10° | | 15° | | 20° | |
| m | t | t | t | t | t | t | t | t | t | t | t | t |
| 16 | 85,5 | 115,0 | - | - | - | - | - | - | - | - | - | - |
| 17 | 85,2 | 115,0 | 79,5 | 111,0 | - | - | 75,5 | 107,0 | - | - | - | - |
| 18 | 85,0 | 115,0 | 79,5 | 111,0 | 73,5 | 90,5 | 75,5 | 107,0 | 70,0 | 105,0 | - | - |
| 19 | 84,5 | 115,0 | 79,2 | 110,5 | 73,5 | 88,7 | 75,0 | 107,0 | 69,7 | 104,5 | 65,0 | 89,5 |
| 20 | 84,0 | 115,0 | 79,0 | 110,0 | 73,5 | 87,0 | 74,5 | 107,0 | 69,5 | 104,0 | 65,0 | 88,0 |
| 22 | 82,5 | 115,0 | 77,5 | 108,0 | 72,5 | 84,0 | 73,5 | 107,0 | 68,5 | 103,0 | 64,0 | 85,0 |
| 24 | 81,0 | 115,0 | 76,5 | 104,0 | 71,5 | 81,0 | 72,5 | 107,0 | 67,5 | 101,0 | 63,5 | 82,0 |
| 26 | 79,5 | 115,0 | 75,0 | 100,0 | 70,5 | 78,5 | 71,0 | 107,0 | 66,5 | 100,0 | 62,5 | 79,5 |
| 28 | 78,0 | 115,0 | 73,5 | 96,5 | 69,0 | 76,0 | 70,0 | 107,0 | 65,5 | 98,0 | 61,5 | 77,0 |
| 30 | 76,5 | 113,0 | 72,5 | 92,5 | 67,0 | 73,5 | 68,5 | 107,0 | 64,5 | 94,5 | 60,5 | 74,5 |
| 34 | 73,5 | 105,0 | 69,5 | 86,5 | 63,0 | 69,5 | 65,8 | 103,0 | 61,8 | 88,5 | 58,1 | 70,5 |
| 38 | 70,5 | 97,5 | 66,6 | 81,0 | 59,5 | 65,8 | 63,1 | 98,3 | 59,3 | 83,0 | 56,0 | 66,8 |
| 42 | 67,5 | 90,5 | 64,0 | 76,0 | 56,5 | 62,5 | 60,5 | 93,0 | 57,0 | 78,0 | 54,0 | 63,5 |
| 46 | 64,8 | 84,8 | 61,6 | 72,0 | 53,8 | 59,5 | 58,5 | 87,3 | 55,3 | 73,6 | 52,3 | 60,5 |
| 50 | 62,3 | 79,5 | 59,5 | 68,1 | 51,4 | 56,8 | 56,5 | 82,0 | 53,5 | 69,8 | 50,7 | 57,8 |
| 54 | 60,0 | 74,5 | 57,5 | 64,5 | 49,3 | 54,5 | 54,5 | 77,0 | 51,5 | 66,5 | 49,3 | 55,5 |
| 58 | 57,3 | 70,8 | 55,1 | 61,8 | 47,3 | 52,1 | 52,5 | 71,6 | 49,8 | 63,5 | 47,7 | 53,5 |
| 62 | 54,6 | 66,8 | 52,8 | 59,1 | 45,5 | 50,2 | 50,4 | 66,5 | 48,1 | 60,3 | 46,1 | 51,5 |
| 66 | 52,0 | 62,5 | 50,5 | 56,5 | 43,9 | 48,6 | 48,4 | 61,5 | 46,3 | 57,0 | 44,5 | 49,6 |
| 70 | 49,6 | 57,8 | 48,3 | 54,1 | 42,4 | 47,0 | 46,3 | 56,5 | 44,4 | 54,0 | 42,8 | 48,0 |
| 74 | 47,2 | 53,8 | 46,1 | 52,2 | 41,0 | 45,5 | 44,2 | 51,9 | 42,5 | 51,3 | 41,1 | 46,4 |
| 78 | 44,7 | 50,5 | 43,7 | 50,5 | 39,8 | 44,1 | 42,1 | 47,8 | 40,6 | 48,6 | 39,5 | 45,1 |
| 82 | 42,2 | 47,1 | 41,3 | 47,3 | 38,6 | 42,5 | 39,8 | 43,6 | 38,6 | 45,4 | 37,5 | 43,8 |
| 86 | 39,7 | 43,7 | 38,9 | 43,9 | 37,3 | 40,3 | 37,6 | 39,7 | 36,5 | 42,3 | 35,6 | 41,7 |
| 90 | 37,2 | 40,3 | 36,5 | 40,5 | 35,8 | 37,4 | 35,4 | 35,9 | 34,5 | 39,1 | 33,7 | 38,9 |
| 94 | 34,6 | 36,8 | 34,1 | 37,0 | 33,5 | 34,5 | 33,2 | 32,4 | 32,4 | 35,9 | 31,7 | 35,8 |
| 98 | 32,1 | 33,3 | 31,7 | 33,6 | 31,2 | 31,5 | 31,0 | 29,1 | 30,3 | 32,7 | 29,8 | 32,6 |
| 102 | 29,7 | 29,9 | 29,3 | 30,2 | 29,0 | 28,6 | 28,8 | 26,1 | 28,3 | 29,6 | 27,9 | 29,5 |
| 106 | 27,1 | 26,4 | 26,9 | 26,7 | 26,7 | 25,6 | 26,6 | 23,3 | 26,2 | 26,4 | 25,9 | 26,3 |
| 108 | 25,9 | 24,7 | 25,7 | 25,0 | 25,6 | 24,2 | 25,5 | 21,9 | 25,2 | 24,8 | 25,0 | 24,8 |
| 110 | 24,6 | 23,0 | 24,5 | 23,3 | - | - | 24,4 | 20,6 | 24,1 | 23,2 | 24,0 | 23,2 |
| 112 | 23,4 | - | 23,3 | - | - | - | 23,3 | 19,4 | 23,1 | 21,6 | 23,0 | 21,7 |
| 113 | 22,8 | - | 22,7 | - | - | - | 22,7 | 18,8 | 22,6 | 20,8 | - | - |
| 114 | - | - | - | - | - | - | 22,2 | 18,2 | 22,1 | 20,1 | - | - |
| 118 | - | - | - | - | - | - | 20,0 | 16,1 | 20,1 | 16,9 | - | - |

**Remarks · Bemerkungen · Remarques**

SSL/LSL+LF2:
Max. capacities with minimum counterweight · Maximale Tragfähigkeiten bei Mindestgegengewicht · Capacités maximales avec contrepoids minimum.

For SSL/LSL+LF2 SGLmax. a boom power-kit is required
Für SSL/LSL+LF2 SGLmax. ist ein Ausleger-Verstärkungs-Kit erforderlich
Un kit à fortifier de flèche principale est nécessaire pour SSL/LSL+LF2 SGLmax.

autovictor

# SSL/LSL+LF2 LIFTING CAPACITIES · TRAGFÄHIGKEITEN · CAPACITÉS DE LEVAGE

160 t | 11-15 m | 0-300 t | 12 m | 14 m x 14 m | 360° | DIN/ISO

| | 126 m | | | | | | 132 m | | | | | |
|---|---|---|---|---|---|---|---|---|---|---|---|---|
| | SSL/LSL+ LF2 | SSL/LSL+LF2 SGLmax. | SSL/LSL+ LF2 | SSL/LSL+LF2 SGLmax. | SSL/LSL+ LF2 | SSL/LSL+LF2 SGLmax. | SSL/LSL+ LF2 | SSL/LSL+LF2 SGLmax. | SSL/LSL+ LF2 | SSL/LSL+LF2 SGLmax. | SSL/LSL+ LF2 | SSL/LSL+LF2 SGLmax. |
| | 10° | | 15° | | 20° | | 10° | | 15° | | 20° | |
| m | t | t | t | t | t | t | t | t | t | t | t | t |
| 17 | 66,0 | 97,5 | - | - | - | - | - | - | - | - | - | - |
| 18 | 66,0 | 97,5 | 62,0 | 96,5 | - | - | 61,5 | 90,5 | - | - | - | - |
| 19 | 65,7 | 97,5 | 62,0 | 96,5 | 58,0 | 90,0 | 61,2 | 90,5 | 58,0 | 89,5 | - | - |
| 20 | 65,5 | 97,5 | 62,0 | 96,5 | 58,0 | 88,5 | 61,0 | 90,5 | 58,0 | 89,5 | 54,5 | 86,5 |
| 22 | 64,5 | 97,5 | 61,0 | 96,0 | 57,5 | 85,5 | 60,5 | 90,0 | 57,5 | 89,5 | 54,5 | 86,5 |
| 24 | 63,5 | 97,5 | 60,0 | 96,0 | 56,5 | 83,0 | 60,0 | 90,0 | 57,0 | 89,0 | 54,0 | 83,5 |
| 26 | 62,5 | 97,5 | 59,0 | 95,5 | 55,5 | 80,5 | 59,0 | 89,5 | 56,0 | 89,0 | 53,0 | 81,0 |
| 28 | 61,5 | 97,5 | 58,0 | 95,0 | 55,0 | 78,0 | 58,5 | 89,5 | 55,5 | 89,0 | 52,5 | 79,0 |
| 30 | 60,5 | 97,5 | 57,0 | 95,0 | 54,0 | 75,5 | 57,5 | 89,0 | 54,5 | 88,5 | 52,0 | 76,5 |
| 34 | 58,1 | 95,8 | 55,0 | 89,6 | 52,0 | 71,5 | 55,8 | 87,6 | 53,1 | 87,5 | 50,6 | 72,5 |
| 38 | 55,8 | 93,8 | 53,0 | 84,5 | 50,2 | 67,8 | 54,1 | 86,0 | 51,6 | 85,0 | 49,3 | 68,8 |
| 42 | 53,5 | 91,5 | 51,0 | 79,5 | 48,6 | 64,5 | 52,5 | 84,0 | 50,0 | 81,0 | 47,9 | 65,5 |
| 46 | 51,5 | 86,8 | 49,4 | 75,5 | 47,0 | 61,8 | 51,1 | 80,6 | 48,7 | 77,0 | 46,5 | 62,8 |
| 50 | 49,7 | 81,5 | 47,8 | 71,6 | 45,5 | 59,1 | 49,7 | 76,5 | 47,4 | 73,1 | 45,3 | 60,1 |
| 54 | 48,1 | 75,5 | 46,2 | 68,0 | 44,1 | 56,5 | 48,3 | 71,5 | 46,1 | 69,5 | 44,1 | 57,5 |
| 58 | 46,3 | 70,1 | 44,6 | 65,0 | 42,6 | 54,5 | 46,8 | 66,5 | 44,7 | 65,8 | 42,9 | 55,5 |
| 62 | 44,5 | 65,0 | 43,0 | 61,6 | 41,2 | 52,5 | 45,3 | 61,6 | 43,4 | 61,6 | 41,7 | 53,5 |
| 66 | 42,7 | 60,0 | 41,4 | 58,0 | 39,8 | 50,5 | 43,8 | 57,0 | 42,1 | 57,0 | 40,5 | 51,5 |
| 70 | 40,9 | 54,8 | 39,8 | 54,0 | 38,4 | 49,0 | 42,3 | 52,3 | 40,7 | 52,7 | 39,3 | 49,2 |
| 74 | 39,1 | 50,4 | 38,2 | 50,1 | 36,9 | 47,3 | 40,8 | 48,0 | 39,4 | 48,5 | 38,1 | 46,5 |
| 78 | 37,4 | 46,2 | 36,6 | 46,4 | 35,5 | 45,6 | 39,4 | 44,2 | 38,1 | 44,6 | 36,9 | 43,6 |
| 82 | 35,5 | 42,1 | 34,9 | 42,8 | 33,9 | 43,1 | 37,9 | 40,4 | 36,7 | 40,8 | 35,6 | 40,8 |
| 86 | 33,7 | 38,1 | 33,1 | 39,3 | 32,2 | 40,4 | 36,4 | 36,7 | 35,4 | 37,1 | 34,4 | 38,0 |
| 90 | 31,9 | 34,4 | 31,4 | 35,9 | 30,6 | 37,5 | 35,0 | 33,1 | 34,1 | 33,5 | 33,2 | 35,3 |
| 94 | 30,1 | 31,0 | 29,6 | 32,7 | 28,9 | 34,5 | 33,5 | 29,7 | 32,7 | 30,2 | 32,0 | 32,6 |
| 98 | 28,3 | 27,7 | 27,8 | 29,5 | 27,2 | 31,6 | 32,0 | 26,6 | 31,4 | 27,0 | 30,8 | 29,9 |
| 102 | 26,4 | 24,6 | 26,1 | 26,5 | 25,6 | 28,7 | 30,5 | 23,6 | 30,1 | 24,0 | 29,6 | 27,2 |
| 106 | 24,6 | 21,8 | 24,3 | 23,7 | 23,9 | 25,7 | 29,0 | 20,8 | 28,7 | 21,2 | 28,4 | 24,5 |
| 110 | 22,8 | 19,2 | 22,5 | 20,9 | 22,2 | 22,8 | 27,5 | 18,2 | 27,4 | 18,6 | 27,2 | 21,8 |
| 114 | 21,0 | 16,8 | 20,8 | 18,3 | 20,5 | 19,9 | 26,1 | 15,8 | 26,2 | 16,1 | 26,0 | 19,1 |
| 117 | 19,6 | 15,2 | 19,4 | 16,4 | 19,3 | 17,7 | 25,0 | 14,1 | 25,2 | 14,4 | 25,1 | 17,1 |
| 118 | 19,2 | 14,7 | 19,0 | 15,7 | - | - | 24,6 | 13,5 | 24,8 | 13,8 | 24,8 | 16,4 |
| 122 | 17,3 | 12,8 | 17,2 | 13,4 | - | - | 22,8 | 11,4 | 23,0 | 11,7 | 23,3 | 13,7 |
| 123 | 16,9 | - | 16,8 | - | - | - | 22,2 | 10,9 | 22,5 | 11,2 | - | - |
| 126 | - | - | - | - | - | - | 20,6 | 9,5 | 20,8 | 9,7 | - | - |
| 128 | - | - | - | - | - | - | 19,4 | - | 19,6 | - | - | - |
| 130 | - | - | - | - | - | - | - | - | - | - | - | - |

**Remarks · Bemerkungen · Remarques**

SSL/LSL+LF2:
Max. capacities with minimum counterweight · Maximale Tragfähigkeiten bei Mindestgegengewicht · Capacités maximales avec contrepoids minimum.

For SSL/LSL+LF2 SGLmax. a boom power-kit is required
Für SSL/LSL+LF2 SGLmax. ist ein Ausleger-Verstärkungs-Kit erforderlich
Un kit à fortifier de flèche principale est nécessaire pour SSL/LSL+LF2 SGLmax.

# SSL/LSL+LF2 LIFTING CAPACITIES · TRAGFÄHIGKEITEN · CAPACITÉS DE LEVAGE

160 t | 11-15 m | 0-300 t | 12 m | 14 m x 14 m | 360° | DIN/ISO

| | 138 m | | | | | |
|---|---|---|---|---|---|---|
| | SSL/LSL+ LF2 | SSL/LSL+LF2 SGLmax. | SSL/LSL+ LF2 | SSL/LSL+LF2 SGLmax. | SSL/LSL+ LF2 | SSL/LSL+LF2 SGLmax. |
| | 10° | | 15° | | 20° | |
| m | t | t | t | t | t | t |
| 18 | 53,0 | 79,5 | - | - | - | - |
| 19 | 53,0 | 79,5 | 51,5 | 79,0 | - | - |
| 20 | 53,0 | 79,5 | 51,5 | 79,0 | 49,2 | 78,0 |
| 22 | 52,5 | 79,0 | 51,5 | 79,0 | 49,2 | 78,0 |
| 24 | 52,0 | 78,5 | 51,0 | 78,5 | 48,8 | 77,5 |
| 26 | 51,5 | 78,0 | 50,5 | 78,0 | 48,4 | 77,0 |
| 28 | 51,0 | 77,5 | 50,0 | 77,5 | 48,0 | 77,0 |
| 30 | 50,0 | 77,0 | 49,7 | 77,0 | 47,6 | 76,5 |
| 34 | 49,1 | 76,0 | 48,7 | 76,0 | 46,6 | 73,1 |
| 38 | 48,1 | 75,0 | 47,6 | 75,0 | 45,7 | 69,8 |
| 42 | 46,9 | 74,0 | 46,6 | 74,0 | 44,8 | 66,5 |
| 46 | 45,3 | 72,3 | 45,4 | 72,6 | 43,8 | 63,5 |
| 50 | 43,2 | 69,3 | 43,7 | 69,8 | 42,6 | 60,8 |
| 54 | 40,8 | 65,0 | 41,7 | 65,5 | 41,3 | 58,5 |
| 58 | 38,3 | 60,6 | 39,7 | 61,1 | 39,9 | 56,1 |
| 62 | 35,8 | 56,5 | 37,6 | 57,0 | 38,6 | 54,0 |
| 66 | 33,3 | 52,5 | 35,6 | 53,0 | 37,2 | 51,5 |
| 70 | 30,8 | 48,8 | 33,6 | 49,2 | 35,8 | 48,1 |
| 74 | 28,3 | 45,1 | 31,6 | 45,5 | 34,5 | 44,8 |
| 78 | 25,9 | 41,5 | 29,5 | 41,9 | 33,2 | 41,6 |
| 82 | 23,4 | 38,0 | 27,5 | 38,4 | 31,8 | 38,4 |
| 84 | 22,2 | 36,3 | 26,5 | 36,7 | 31,2 | 36,9 |
| 86 | - | 34,6 | 25,4 | 35,0 | 30,5 | 35,3 |
| 90 | - | 31,4 | 23,4 | 31,8 | 29,1 | 32,3 |
| 94 | - | 28,3 | 21,4 | 28,7 | 27,8 | 29,4 |
| 98 | - | 25,3 | 19,3 | 25,7 | 26,4 | 26,6 |
| 102 | - | 22,5 | 17,3 | 22,8 | 25,1 | 23,9 |
| 106 | - | 19,8 | 15,3 | 20,1 | 23,7 | 21,2 |
| 110 | - | 17,2 | 13,2 | 17,5 | 22,3 | 18,6 |
| 114 | - | 14,8 | 11,2 | 15,1 | 21,0 | 16,2 |
| 118 | - | 12,6 | 9,1 | 12,8 | 19,6 | 13,8 |
| 122 | - | 10,4 | 7,1 | 10,6 | 18,2 | 11,5 |
| 126 | - | 8,4 | 5,1 | 8,6 | 16,9 | 9,3 |
| 127 | - | 7,9 | 4,5 | 8,1 | 16,6 | 8,8 |
| 129 | - | 6,9 | 3,5 | 7,2 | - | - |
| 130 | - | 6,5 | - | 6,7 | - | - |
| 134 | - | - | - | 4,9 | - | - |

**Remarks · Bemerkungen · Remarques**

SSL/LSL+LF2:
Max. capacities with minimum counterweight · Maximale Tragfähigkeiten bei Mindestgegengewicht · Capacités maximales avec contrepoids minimum.

For SSL/LSL+LF2 SGLmax. a boom power-kit is required
Für SSL/LSL+LF2 SGLmax. ist ein Ausleger-Verstärkungs-Kit erforderlich
Un kit à fortifier de flèche principale est nécessaire pour SSL/LSL+LF2 SGLmax.

autovictor

# SW WORKING RANGES · ARBEITSBEREICHE · PORTÉES

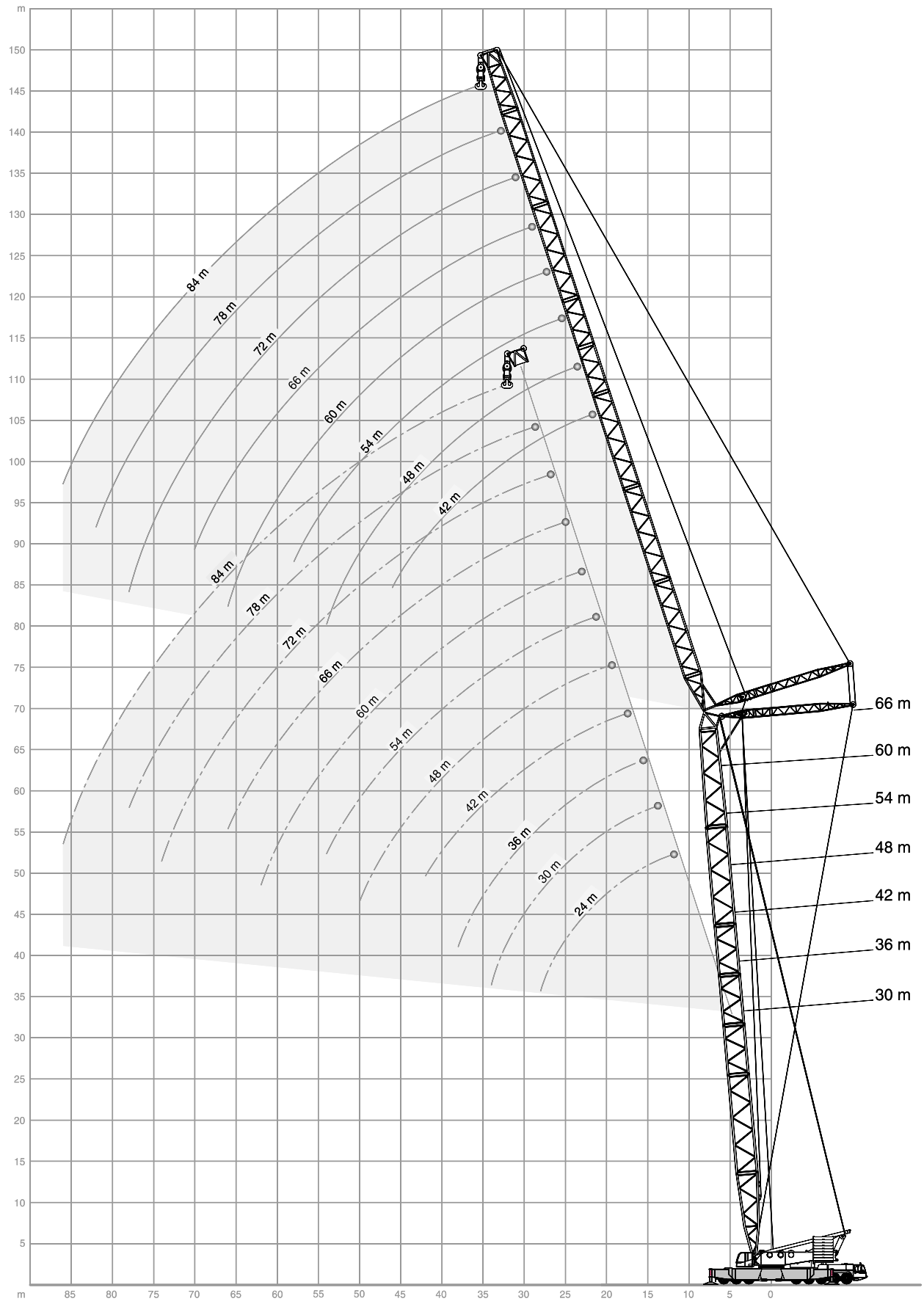

# SW LIFTING CAPACITIES · TRAGFÄHIGKEITEN · CAPACITÉS DE LEVAGE

200 t | 14 m x 14 m | 360° | DIN/ISO

30 m

| | 24 m | | | 30 m | | | 36 m | | | 42 m | | | 48 m | | | 54 m | | |
|---|---|---|---|---|---|---|---|---|---|---|---|---|---|---|---|---|---|---|
| | 85° | 75° | 65° | 85° | 75° | 65° | 85° | 75° | 65° | 85° | 75° | 65° | 85° | 75° | 65° | 85° | 75° | 65° |
| m | t | t | t | t | t | t | t | t | t | t | t | t | t | t | t | t | t | t |
| 14 | 287,0 | - | - | - | - | - | - | - | - | - | - | - | - | - | - | - | - | - |
| 16 | 252,0 | - | - | 245,0 | - | - | - | - | - | - | - | - | - | - | - | - | - | - |
| 18 | 221,0 | - | - | 220,0 | - | - | 206,0 | - | - | - | - | - | - | - | - | - | - | - |
| 20 | 196,0 | - | - | 195,0 | - | - | 194,0 | - | - | 182,0 | - | - | - | - | - | - | - | - |
| 22 | 175,0 | - | - | 174,0 | - | - | 173,0 | - | - | 172,0 | - | - | 156,0 | - | - | - | - | - |
| 24 | 155,0 | 147,0 | - | 154,0 | - | - | 154,0 | - | - | 152,0 | - | - | 151,0 | - | - | 136,0 | - | - |
| 26 | 137,0 | 131,0 | - | 137,0 | 130,0 | - | 136,0 | - | - | 135,0 | - | - | 135,0 | - | - | 133,0 | - | - |
| 28 | 123,0 | 118,0 | - | 123,0 | 117,0 | - | 122,0 | - | - | 121,0 | - | - | 121,0 | - | - | 120,0 | - | - |
| 30 | - | 107,0 | - | 111,0 | 106,0 | - | 111,0 | 105,0 | - | 110,0 | - | - | 109,0 | - | - | 108,0 | - | - |
| 32 | - | 97,5 | 93,0 | 102,2 | 96,5 | - | 102,0 | 95,5 | - | 101,0 | 94,5 | - | 100,2 | - | - | 99,2 | - | - |
| 34 | - | - | 85,5 | 93,5 | 88,5 | - | 93,0 | 88,0 | - | 92,0 | 87,0 | - | 91,5 | 86,0 | - | 90,5 | - | - |
| 36 | - | - | 79,0 | - | 82,0 | 77,5 | 86,2 | 81,0 | - | 85,2 | 80,0 | - | 84,7 | 79,0 | - | 83,7 | - | - |
| 38 | - | - | 73,0 | - | 76,0 | 72,0 | 79,5 | 75,0 | - | 78,5 | 74,0 | - | 78,0 | 73,5 | - | 77,0 | 72,0 | - |
| 40 | - | - | - | - | - | 67,0 | - | 70,0 | 66,0 | 73,5 | 69,0 | - | 73,0 | 68,0 | - | 72,0 | 67,0 | - |
| 42 | - | - | - | - | - | 62,5 | - | 65,5 | 61,5 | 68,5 | 64,5 | - | 68,0 | 63,5 | - | 67,0 | 62,5 | - |
| 44 | - | - | - | - | - | - | - | 61,5 | 58,0 | - | 60,5 | 56,5 | 63,7 | 59,5 | - | 62,7 | 58,5 | - |
| 46 | - | - | - | - | - | - | - | - | 54,5 | - | 56,5 | 53,0 | 59,5 | 56,0 | 52,5 | 58,5 | 55,0 | - |
| 50 | - | - | - | - | - | - | - | - | 48,6 | - | 50,5 | 47,5 | 53,0 | 49,9 | 46,6 | 52,0 | 48,7 | 45,3 |
| 54 | - | - | - | - | - | - | - | - | - | - | - | 42,6 | - | 44,7 | 41,7 | 46,8 | 43,5 | 40,4 |
| 56 | - | - | - | - | - | - | - | - | - | - | - | - | - | 42,5 | 39,5 | - | 41,3 | 38,3 |
| 58 | - | - | - | - | - | - | - | - | - | - | - | - | - | - | 37,6 | - | 39,2 | 36,3 |
| 62 | - | - | - | - | - | - | - | - | - | - | - | - | - | - | - | - | 35,6 | 32,9 |
| 66 | - | - | - | - | - | - | - | - | - | - | - | - | - | - | - | - | - | 29,9 |

| | 60 m | | | 66 m | | | 72 m | | | 78 m | | | 84 m | | |
|---|---|---|---|---|---|---|---|---|---|---|---|---|---|---|---|
| | 85° | 75° | 65° | 85° | 75° | 65° | 85° | 75° | 65° | 85° | 75° | 65° | 85° | 75° | 65° |
| m | t | t | t | t | t | t | t | t | t | t | t | t | t | t | t |
| 26 | 117,0 | - | - | - | - | - | - | - | - | - | - | - | - | - | - |
| 28 | 117,0 | - | - | 102,0 | - | - | - | - | - | - | - | - | - | - | - |
| 30 | 107,0 | - | - | 102,0 | - | - | 89,0 | - | - | - | - | - | - | - | - |
| 34 | 90,0 | - | - | 89,0 | - | - | 88,0 | - | - | 76,0 | - | - | 66,0 | - | - |
| 38 | 76,5 | - | - | 76,0 | - | - | 75,0 | - | - | 74,0 | - | - | 66,0 | - | - |
| 40 | 71,2 | 66,5 | - | 70,7 | - | - | 69,7 | - | - | 69,2 | - | - | 64,5 | - | - |
| 42 | 66,0 | 61,5 | - | 65,5 | - | - | 64,5 | - | - | 64,5 | - | - | 63,0 | - | - |
| 44 | 62,0 | 57,5 | - | 61,5 | 57,0 | - | 60,5 | - | - | 60,2 | - | - | 59,0 | - | - |
| 46 | 58,0 | 54,0 | - | 57,5 | 53,5 | - | 56,5 | 52,0 | - | 56,0 | - | - | 55,0 | - | - |
| 50 | 51,5 | 48,0 | - | 51,0 | 47,2 | - | 49,9 | 46,0 | - | 49,6 | 45,7 | - | 48,8 | - | - |
| 52 | 48,8 | 45,2 | - | 48,2 | 44,5 | - | 47,1 | 43,3 | - | 46,8 | 43,0 | - | 46,0 | 42,0 | - |
| 54 | 46,1 | 42,8 | 39,6 | 45,5 | 42,1 | - | 44,4 | 40,9 | - | 44,1 | 40,5 | - | 43,3 | 39,6 | - |
| 58 | 41,5 | 38,4 | 35,5 | 40,9 | 37,7 | 34,7 | 39,8 | 36,5 | - | 39,5 | 36,2 | - | 38,6 | 35,2 | - |
| 62 | 37,7 | 34,7 | 32,0 | 37,0 | 34,0 | 31,2 | 35,9 | 32,8 | 29,9 | 35,6 | 32,5 | - | 34,7 | 31,5 | - |
| 66 | - | 31,6 | 29,0 | 33,6 | 30,8 | 28,2 | 32,5 | 29,6 | 26,7 | 32,2 | 29,3 | 26,2 | 31,3 | 28,3 | - |
| 68 | - | 30,2 | 27,6 | - | 29,4 | 26,8 | 31,0 | 28,2 | 25,3 | 30,7 | 27,8 | 24,8 | 29,8 | 26,8 | - |
| 70 | - | - | 26,4 | - | 28,1 | 25,5 | 29,6 | 26,9 | 24,0 | 29,2 | 26,5 | 23,5 | 28,3 | 25,4 | 22,3 |
| 74 | - | - | - | - | 25,8 | 23,1 | 27,1 | 24,5 | 21,6 | 26,7 | 24,0 | 21,1 | 25,8 | 22,8 | 19,9 |
| 78 | - | - | - | - | - | 21,1 | - | 22,3 | 19,5 | 24,4 | 21,7 | 19,0 | 23,5 | 20,6 | 17,8 |
| 80 | - | - | - | - | - | - | - | 21,3 | 18,6 | - | 20,7 | 18,0 | 22,4 | 19,5 | 16,8 |
| 82 | - | - | - | - | - | - | - | - | 17,7 | - | 19,7 | 17,1 | 21,4 | 18,6 | 15,9 |
| 84 | - | - | - | - | - | - | - | - | - | - | 18,9 | 16,3 | 20,4 | 17,7 | 15,0 |
| 86 | - | - | - | - | - | - | - | - | - | - | - | 15,5 | 19,5 | 16,8 | 14,2 |
| 90 | - | - | - | - | - | - | - | - | - | - | - | 14,0 | - | 15,3 | 12,8 |
| 94 | - | - | - | - | - | - | - | - | - | - | - | - | - | - | 11,5 |

**Remarks · Bemerkungen · Remarques**

Main boom angle 85°, 75° and 65°, capacities for intermediate boom positions are calculated by the crane control system IC-1
Hauptauslegerwinkel 85°, 75° und 65°, Traglasten für Zwischenstellungen des Hauptauslegers werden von der Kransteuerung IC-1 berechnet
Jarret de flèche principale 85°, 75° et 65°, le système de commande de la grue IC-1 calcule les charges pour les positions intermédiaires de la flèche

autovictor

# SW LIFTING CAPACITIES · TRAGFÄHIGKEITEN · CAPACITÉS DE LEVAGE

200 t | 14 m x 14 m | 360° | DIN/ISO

36 m

| | 24 m | | | 30 m | | | 36 m | | | 42 m | | | 48 m | | | 54 m | | |
|---|---|---|---|---|---|---|---|---|---|---|---|---|---|---|---|---|---|---|
| | 85° | 75° | 65° | 85° | 75° | 65° | 85° | 75° | 65° | 85° | 75° | 65° | 85° | 75° | 65° | 85° | 75° | 65° |
| m | t | t | t | t | t | t | t | t | t | t | t | t | t | t | t | t | t | t |
| 16 | 250,0 | - | - | - | - | - | - | - | - | - | - | - | - | - | - | - | - | - |
| 18 | 220,0 | - | - | 218,0 | - | - | 189,0 | - | - | - | - | - | - | - | - | - | - | - |
| 20 | 194,0 | - | - | 193,0 | - | - | 189,0 | - | - | 164,0 | - | - | - | - | - | - | - | - |
| 22 | 173,0 | - | - | 172,0 | - | - | 172,0 | - | - | 164,0 | - | - | 139,0 | - | - | - | - | - |
| 24 | 154,0 | - | - | 154,0 | - | - | 153,0 | - | - | 151,0 | - | - | 139,0 | - | - | 120,0 | - | - |
| 26 | 137,0 | 129,0 | - | 136,0 | - | - | 136,0 | - | - | 135,0 | - | - | 134,0 | - | - | 120,0 | - | - |
| 28 | 123,0 | 116,0 | - | 122,0 | 115,0 | - | 122,0 | - | - | 121,0 | - | - | 120,0 | - | - | 119,0 | - | - |
| 30 | - | 105,0 | - | 111,0 | 104,0 | - | 110,0 | 103,0 | - | 109,0 | - | - | 109,0 | - | - | 108,0 | - | - |
| 34 | - | 88,0 | 82,5 | 93,0 | 87,0 | - | 92,5 | 86,5 | - | 91,5 | 85,0 | - | 91,0 | - | - | 90,0 | - | - |
| 36 | - | - | 76,5 | - | 80,5 | - | 86,0 | 79,5 | - | 85,0 | 78,5 | - | 84,5 | 77,5 | - | 83,2 | - | - |
| 38 | - | - | 71,0 | - | 74,5 | 69,5 | 79,5 | 74,0 | - | 78,5 | 72,5 | - | 78,0 | 72,0 | - | 76,5 | - | - |
| 40 | - | - | - | - | 69,5 | 65,0 | - | 68,5 | - | 73,2 | 67,5 | - | 72,7 | 67,0 | - | 71,5 | 65,5 | - |
| 42 | - | - | - | - | - | 60,5 | - | 64,0 | 59,5 | 68,0 | 63,0 | - | 67,5 | 62,5 | - | 66,5 | 61,0 | - |
| 46 | - | - | - | - | - | 53,5 | - | 56,5 | 52,5 | 60,0 | 55,5 | 51,0 | 59,5 | 54,5 | - | 58,5 | 53,5 | - |
| 50 | - | - | - | - | - | - | - | - | 46,7 | - | 49,6 | 45,6 | 53,0 | 48,7 | 44,6 | 52,0 | 47,6 | - |
| 52 | - | - | - | - | - | - | - | - | - | - | 46,9 | 43,1 | - | 46,1 | 42,1 | 49,3 | 44,9 | - |
| 54 | - | - | - | - | - | - | - | - | - | - | - | 40,8 | - | 43,7 | 39,9 | 46,6 | 42,5 | 38,6 |
| 58 | - | - | - | - | - | - | - | - | - | - | - | 36,9 | - | 39,4 | 35,9 | 42,1 | 38,2 | 34,6 |
| 62 | - | - | - | - | - | - | - | - | - | - | - | - | - | - | 32,5 | - | 34,6 | 31,2 |
| 64 | - | - | - | - | - | - | - | - | - | - | - | - | - | - | - | - | 33,1 | 29,7 |
| 66 | - | - | - | - | - | - | - | - | - | - | - | - | - | - | - | - | - | 28,4 |
| 70 | - | - | - | - | - | - | - | - | - | - | - | - | - | - | - | - | - | 25,8 |
| 74 | - | - | - | - | - | - | - | - | - | - | - | - | - | - | - | - | - | - |

| | 60 m | | | 66 m | | | 72 m | | | 78 m | | | 84 m | | |
|---|---|---|---|---|---|---|---|---|---|---|---|---|---|---|---|
| | 85° | 75° | 65° | 85° | 75° | 65° | 85° | 75° | 65° | 85° | 75° | 65° | 85° | 75° | 65° |
| m | t | t | t | t | t | t | t | t | t | t | t | t | t | t | t |
| 26 | 107,0 | - | - | - | - | - | - | - | - | - | - | - | - | - | - |
| 28 | 107,0 | - | - | 93,0 | - | - | - | - | - | - | - | - | - | - | - |
| 30 | 107,0 | - | - | 93,0 | - | - | 80,0 | - | - | - | - | - | - | - | - |
| 34 | 89,5 | - | - | 88,0 | - | - | 80,0 | - | - | 70,0 | - | - | 61,0 | - | - |
| 38 | 76,0 | - | - | 75,5 | - | - | 74,0 | - | - | 70,0 | - | - | 61,0 | - | - |
| 42 | 66,0 | 60,5 | - | 65,5 | - | - | 64,0 | - | - | 64,0 | - | - | 60,0 | - | - |
| 44 | 61,7 | 56,5 | - | 61,2 | 55,5 | - | 60,0 | - | - | 60,0 | - | - | 57,5 | - | - |
| 46 | 57,5 | 52,5 | - | 57,0 | 52,0 | - | 56,0 | - | - | 56,0 | - | - | 55,0 | - | - |
| 48 | 54,2 | 49,7 | - | 53,7 | 49,0 | - | 52,8 | 47,7 | - | 52,7 | - | - | 51,7 | - | - |
| 50 | 51,0 | 46,8 | - | 50,5 | 46,0 | - | 49,6 | 44,8 | - | 49,4 | 44,5 | - | 48,5 | - | - |
| 54 | 45,9 | 41,7 | - | 45,2 | 40,9 | - | 44,1 | 39,7 | - | 43,9 | 39,4 | - | 43,0 | 38,4 | - |
| 58 | 41,3 | 37,4 | 33,7 | 40,6 | 36,7 | - | 39,5 | 35,5 | - | 39,3 | 35,1 | - | 38,4 | 34,1 | - |
| 62 | 37,4 | 33,8 | 30,3 | 36,7 | 33,0 | 29,4 | 35,6 | 31,8 | - | 35,3 | 31,5 | - | 34,5 | 30,5 | - |
| 66 | - | 30,7 | 27,3 | 33,4 | 29,9 | 26,3 | 32,3 | 28,7 | 24,8 | 32,0 | 28,3 | - | 31,1 | 27,2 | - |
| 70 | - | 28,0 | 24,7 | - | 27,2 | 23,7 | 29,4 | 25,9 | 22,2 | 29,0 | 25,5 | 21,7 | 28,1 | 24,3 | - |
| 74 | - | - | 22,4 | - | 24,9 | 21,4 | 26,9 | 23,4 | 19,9 | 26,5 | 23,0 | 19,4 | 25,5 | 21,8 | 18,1 |
| 78 | - | - | - | - | - | 19,4 | - | 21,3 | 17,9 | 24,2 | 20,7 | 17,3 | 23,3 | 19,6 | 16,1 |
| 80 | - | - | - | - | - | - | - | 20,3 | 17,0 | - | 19,7 | 16,4 | 22,2 | 18,6 | 15,2 |
| 82 | - | - | - | - | - | - | - | - | 16,1 | - | 18,8 | 15,5 | 21,1 | 17,6 | 14,3 |
| 86 | - | - | - | - | - | - | - | - | 14,6 | - | 17,1 | 14,0 | 19,3 | 15,9 | 12,7 |
| 90 | - | - | - | - | - | - | - | - | - | - | - | 12,6 | - | 14,4 | 11,3 |
| 92 | - | - | - | - | - | - | - | - | - | - | - | - | - | 13,7 | 10,6 |
| 94 | - | - | - | - | - | - | - | - | - | - | - | - | - | - | 10,0 |
| 98 | - | - | - | - | - | - | - | - | - | - | - | - | - | - | 8,9 |
| 102 | - | - | - | - | - | - | - | - | - | - | - | - | - | - | - |

**Remarks · Bemerkungen · Remarques**

Main boom angle 85°, 75° and 65°, capacities for intermediate boom positions are calculated by the crane control system IC-1
Hauptauslegerwinkel 85°, 75° und 65°, Traglasten für Zwischenstellungen des Hauptauslegers werden von der Kransteuerung IC-1 berechnet
Jarret de flèche principale 85°, 75° et 65°, le système de commande de la grue IC-1 calcule les charges pour les positions intermédiaires de la flèche

# SW LIFTING CAPACITIES · TRAGFÄHIGKEITEN · CAPACITÉS DE LEVAGE

200 t | 14 m x 14 m | 360° | DIN/ISO

42 m

| | 24 m | | | 30 m | | | 36 m | | | 42 m | | | 48 m | | | 54 m | | |
|---|---|---|---|---|---|---|---|---|---|---|---|---|---|---|---|---|---|---|
| | 85° | 75° | 65° | 85° | 75° | 65° | 85° | 75° | 65° | 85° | 75° | 65° | 85° | 75° | 65° | 85° | 75° | 65° |
| m | t | t | t | t | t | t | t | t | t | t | t | t | t | t | t | t | t | t |
| 16 | 241,0 | - | - | - | - | - | - | - | - | - | - | - | - | - | - | - | - | - |
| 18 | 218,0 | - | - | 207,0 | - | - | - | - | - | - | - | - | - | - | - | - | - | - |
| 20 | 192,0 | - | - | 191,0 | - | - | 167,0 | - | - | - | - | - | - | - | - | - | - | - |
| 22 | 172,0 | - | - | 171,0 | - | - | 166,0 | - | - | 145,0 | - | - | - | - | - | - | - | - |
| 24 | 154,0 | - | - | 153,0 | - | - | 151,0 | - | - | 144,0 | - | - | 128,0 | - | - | 110,0 | - | - |
| 26 | 137,0 | 127,0 | - | 136,0 | - | - | 135,0 | - | - | 134,0 | - | - | 128,0 | - | - | 110,0 | - | - |
| 28 | 123,0 | 114,0 | - | 122,0 | - | - | 122,0 | - | - | 120,0 | - | - | 119,0 | - | - | 110,0 | - | - |
| 30 | - | 103,0 | - | 111,0 | 102,0 | - | 110,0 | - | - | 109,0 | - | - | 108,0 | - | - | 107,0 | - | - |
| 32 | - | 94,0 | - | 102,0 | 93,0 | - | 101,2 | 92,0 | - | 100,2 | - | - | 99,2 | - | - | 98,2 | - | - |
| 34 | - | 86,5 | - | 93,0 | 85,5 | - | 92,5 | 84,5 | - | 91,5 | - | - | 90,5 | - | - | 89,5 | - | - |
| 36 | - | 80,0 | - | - | 79,0 | - | 85,7 | 78,0 | - | 84,7 | 76,5 | - | 84,0 | - | - | 83,0 | - | - |
| 38 | - | - | 68,0 | - | 73,0 | - | 79,0 | 72,0 | - | 78,0 | 71,0 | - | 77,5 | 70,0 | - | 76,5 | - | - |
| 40 | - | - | 63,5 | - | 68,0 | - | - | 67,0 | - | 73,0 | 66,0 | - | 72,2 | 65,0 | - | 71,2 | 64,0 | - |
| 42 | - | - | 59,5 | - | 63,5 | 58,0 | - | 63,0 | - | 68,0 | 61,5 | - | 67,0 | 61,0 | - | 66,0 | 59,5 | - |
| 46 | - | - | - | - | - | 51,0 | - | 55,5 | 50,0 | 60,0 | 54,0 | - | 59,0 | 53,5 | - | 58,0 | 52,0 | - |
| 48 | - | - | - | - | - | - | - | 52,0 | 47,3 | - | 51,0 | - | 55,7 | 50,0 | - | 54,7 | 49,1 | - |
| 50 | - | - | - | - | - | - | - | - | 44,6 | - | 48,3 | 43,4 | 52,5 | 47,5 | - | 51,5 | 46,3 | - |
| 54 | - | - | - | - | - | - | - | - | 40,0 | - | 43,4 | 38,8 | - | 42,5 | 37,9 | 46,3 | 41,3 | - |
| 58 | - | - | - | - | - | - | - | - | - | - | - | 35,0 | - | 38,3 | 34,0 | 41,8 | 37,1 | 32,7 |
| 60 | - | - | - | - | - | - | - | - | - | - | - | - | - | 36,5 | 32,3 | - | 35,3 | 30,9 |
| 62 | - | - | - | - | - | - | - | - | - | - | - | - | - | - | 30,8 | - | 33,6 | 29,3 |
| 64 | - | - | - | - | - | - | - | - | - | - | - | - | - | - | 29,3 | - | 32,0 | 27,8 |
| 66 | - | - | - | - | - | - | - | - | - | - | - | - | - | - | 28,0 | - | - | 26,4 |
| 70 | - | - | - | - | - | - | - | - | - | - | - | - | - | - | - | - | - | 23,9 |
| 74 | - | - | - | - | - | - | - | - | - | - | - | - | - | - | - | - | - | - |

| | 60 m | | | 66 m | | | 72 m | | | 78 m | | | 84 m | | |
|---|---|---|---|---|---|---|---|---|---|---|---|---|---|---|---|
| | 85° | 75° | 65° | 85° | 75° | 65° | 85° | 75° | 65° | 85° | 75° | 65° | 85° | 75° | 65° |
| m | t | t | t | t | t | t | t | t | t | t | t | t | t | t | t |
| 26 | 96,0 | - | - | - | - | - | - | - | - | - | - | - | - | - | - |
| 28 | 96,0 | - | - | 86,0 | - | - | - | - | - | - | - | - | - | - | - |
| 30 | 96,0 | - | - | 86,0 | - | - | 73,0 | - | - | - | - | - | - | - | - |
| 34 | 88,0 | - | - | 86,0 | - | - | 73,0 | - | - | 66,0 | - | - | 57,0 | - | - |
| 38 | 76,0 | - | - | 75,0 | - | - | 72,0 | - | - | 66,0 | - | - | 57,0 | - | - |
| 42 | 65,5 | - | - | 65,0 | - | - | 64,0 | - | - | 63,0 | - | - | 56,0 | - | - |
| 44 | 61,5 | 55,0 | - | 61,0 | - | - | 59,7 | - | - | 59,2 | - | - | 55,0 | - | - |
| 46 | 57,5 | 51,5 | - | 57,0 | 50,5 | - | 55,5 | - | - | 55,5 | - | - | 54,0 | - | - |
| 50 | 51,0 | 45,5 | - | 50,0 | 44,7 | - | 49,3 | 43,4 | - | 49,1 | - | - | 48,2 | - | - |
| 52 | 48,3 | 42,9 | - | 47,4 | 42,1 | - | 46,5 | 40,8 | - | 46,3 | 40,5 | - | 45,4 | - | - |
| 54 | 45,6 | 40,5 | - | 44,9 | 39,7 | - | 43,8 | 38,5 | - | 43,6 | 38,1 | - | 42,7 | 37,1 | - |
| 58 | 41,0 | 36,3 | - | 40,4 | 35,5 | - | 39,2 | 34,3 | - | 39,0 | 33,9 | - | 38,1 | 32,9 | - |
| 62 | 37,2 | 32,7 | 28,2 | 36,5 | 32,0 | 27,2 | 35,3 | 30,7 | - | 35,1 | 30,4 | - | 34,2 | 29,2 | - |
| 66 | - | 29,7 | 25,3 | 33,1 | 28,9 | 24,3 | 32,0 | 27,5 | 22,7 | 31,7 | 27,1 | - | 30,8 | 26,0 | - |
| 70 | - | 27,1 | 22,8 | 30,3 | 26,2 | 21,8 | 29,1 | 24,7 | 20,2 | 28,8 | 24,3 | 19,7 | 27,9 | 23,1 | - |
| 74 | - | - | 20,6 | - | 23,8 | 19,6 | 26,6 | 22,3 | 18,0 | 26,2 | 21,9 | 17,5 | 25,3 | 20,7 | 16,2 |
| 76 | - | - | 19,6 | - | 22,7 | 18,6 | - | 21,2 | 17,0 | 25,1 | 20,7 | 16,5 | 24,1 | 19,6 | 15,2 |
| 78 | - | - | 18,7 | - | - | 17,7 | - | 20,2 | 16,1 | 24,0 | 19,7 | 15,6 | 23,0 | 18,5 | 14,3 |
| 82 | - | - | - | - | - | 16,0 | - | 18,3 | 14,4 | - | 17,8 | 13,8 | 20,8 | 16,6 | 12,6 |
| 86 | - | - | - | - | - | - | - | - | 12,9 | - | 16,1 | 12,3 | 19,0 | 14,9 | 11,1 |
| 88 | - | - | - | - | - | - | - | - | 12,3 | - | 15,4 | 11,6 | - | 14,1 | 10,4 |
| 90 | - | - | - | - | - | - | - | - | 11,7 | - | - | 11,0 | - | 13,4 | 9,7 |
| 94 | - | - | - | - | - | - | - | - | - | - | - | 9,8 | - | 12,1 | 8,5 |
| 98 | - | - | - | - | - | - | - | - | - | - | - | - | - | - | 7,4 |
| 102 | - | - | - | - | - | - | - | - | - | - | - | - | - | - | - |

**Remarks · Bemerkungen · Remarques**

Main boom angle 85°, 75° and 65°, capacities for intermediate boom positions are calculated by the crane control system IC-1
Hauptauslegerwinkel 85°, 75° und 65°, Traglasten für Zwischenstellungen des Hauptauslegers werden von der Kransteuerung IC-1 berechnet
Jarret de flèche principale 85°, 75° et 65°, le système de commande de la grue IC-1 calcule les charges pour les positions intermédiaires de la flèche

# SW LIFTING CAPACITIES · TRAGFÄHIGKEITEN · CAPACITÉS DE LEVAGE

200 t | 14 m x 14 m | 360° | DIN/ISO

48 m

| | 24 m | | | 30 m | | | 36 m | | | 42 m | | | 48 m | | | 54 m | | |
|---|---|---|---|---|---|---|---|---|---|---|---|---|---|---|---|---|---|---|
| | 85° | 75° | 65° | 85° | 75° | 65° | 85° | 75° | 65° | 85° | 75° | 65° | 85° | 75° | 65° | 85° | 75° | 65° |
| m | t | t | t | t | t | t | t | t | t | t | t | t | t | t | t | t | t | t |
| 16 | 212,0 | - | - | - | - | - | - | - | - | - | - | - | - | - | - | - | - | - |
| 18 | 212,0 | - | - | 181,0 | - | - | - | - | - | - | - | - | - | - | - | - | - | - |
| 20 | 191,0 | - | - | 181,0 | - | - | 156,0 | - | - | - | - | - | - | - | - | - | - | - |
| 22 | 170,0 | - | - | 166,0 | - | - | 156,0 | - | - | 136,0 | - | - | - | - | - | - | - | - |
| 24 | 153,0 | - | - | 152,0 | - | - | 146,0 | - | - | 136,0 | - | - | 117,0 | - | - | - | - | - |
| 26 | 136,0 | - | - | 135,0 | - | - | 134,0 | - | - | 130,0 | - | - | 117,0 | - | - | 103,0 | - | - |
| 28 | 122,0 | 111,0 | - | 122,0 | - | - | 121,0 | - | - | 119,0 | - | - | 116,0 | - | - | 103,0 | - | - |
| 30 | 111,0 | 101,0 | - | 110,0 | - | - | 110,0 | - | - | 108,0 | - | - | 107,0 | - | - | 102,0 | - | - |
| 32 | - | 92,0 | - | 101,2 | 91,0 | - | 101,0 | - | - | 99,5 | - | - | 98,5 | - | - | 95,5 | - | - |
| 34 | - | 84,5 | - | 92,5 | 83,5 | - | 92,0 | 82,5 | - | 91,0 | - | - | 90,0 | - | - | 89,0 | - | - |
| 36 | - | 78,0 | - | - | 77,0 | - | 85,2 | 76,0 | - | 84,2 | 75,0 | - | 83,5 | - | - | 82,5 | - | - |
| 38 | - | 72,5 | - | - | 71,5 | - | 78,5 | 70,5 | - | 77,5 | 69,5 | - | 77,0 | - | - | 76,0 | - | - |
| 40 | - | - | - | - | 66,5 | - | - | 65,5 | - | 72,5 | 64,5 | - | 72,0 | 63,5 | - | 71,0 | - | - |
| 42 | - | - | 57,0 | - | 62,0 | - | - | 61,0 | - | 67,5 | 60,0 | - | 67,0 | 59,0 | - | 66,0 | 58,0 | - |
| 44 | - | - | 53,0 | - | 58,5 | 52,0 | - | 57,5 | - | 63,5 | 56,0 | - | 63,0 | 55,5 | - | 61,7 | 54,0 | - |
| 46 | - | - | 50,0 | - | - | 49,0 | - | 54,0 | - | 59,5 | 52,5 | - | 59,0 | 52,0 | - | 57,5 | 50,5 | - |
| 48 | - | - | - | - | - | 46,2 | - | 50,5 | 44,9 | - | 49,8 | - | 55,5 | 48,9 | - | 54,2 | 47,7 | - |
| 50 | - | - | - | - | - | 43,6 | - | 48,1 | 42,3 | - | 47,0 | 41,1 | 52,0 | 46,1 | - | 51,0 | 44,9 | - |
| 54 | - | - | - | - | - | - | - | - | 37,9 | - | 42,1 | 36,7 | - | 41,2 | 35,7 | 45,9 | 40,0 | - |
| 58 | - | - | - | - | - | - | - | - | - | - | - | 33,0 | - | 37,1 | 31,9 | 41,4 | 35,9 | 30,3 |
| 60 | - | - | - | - | - | - | - | - | - | - | - | 31,4 | - | 35,3 | 30,2 | - | 34,1 | 28,6 |
| 62 | - | - | - | - | - | - | - | - | - | - | - | 29,8 | - | - | 28,6 | - | 32,4 | 27,1 |
| 66 | - | - | - | - | - | - | - | - | - | - | - | - | - | - | 25,9 | - | 29,5 | 24,3 |
| 70 | - | - | - | - | - | - | - | - | - | - | - | - | - | - | - | - | - | 21,9 |
| 74 | - | - | - | - | - | - | - | - | - | - | - | - | - | - | - | - | - | 19,8 |

| | 60 m | | | 66 m | | | 72 m | | | 78 m | | | 84 m | | |
|---|---|---|---|---|---|---|---|---|---|---|---|---|---|---|---|
| | 85° | 75° | 65° | 85° | 75° | 65° | 85° | 75° | 65° | 85° | 75° | 65° | 85° | 75° | 65° |
| m | t | t | t | t | t | t | t | t | t | t | t | t | t | t | t |
| 28 | 91,0 | - | - | - | - | - | - | - | - | - | - | - | - | - | - |
| 30 | 91,0 | - | - | 79,0 | - | - | - | - | - | - | - | - | - | - | - |
| 34 | 88,0 | - | - | 79,0 | - | - | 70,0 | - | - | 61,0 | - | - | 53,0 | - | - |
| 38 | 75,5 | - | - | 74,0 | - | - | 69,0 | - | - | 61,0 | - | - | 53,0 | - | - |
| 42 | 65,0 | - | - | 64,5 | - | - | 63,0 | - | - | 60,0 | - | - | 53,0 | - | - |
| 46 | 57,0 | 50,0 | - | 56,5 | - | - | 55,5 | - | - | 55,0 | - | - | 52,0 | - | - |
| 48 | 53,7 | 46,9 | - | 53,2 | 46,1 | - | 52,2 | - | - | 51,8 | - | - | 49,5 | - | - |
| 50 | 50,5 | 44,1 | - | 50,0 | 43,3 | - | 48,9 | 42,0 | - | 48,7 | - | - | 47,0 | - | - |
| 54 | 45,3 | 39,2 | - | 44,6 | 38,4 | - | 43,5 | 37,1 | - | 43,3 | 36,8 | - | 42,4 | - | - |
| 56 | 43,0 | 37,1 | - | 42,3 | 36,3 | - | 41,2 | 35,0 | - | 41,0 | 34,6 | - | 40,1 | 33,5 | - |
| 58 | 40,7 | 35,1 | - | 40,0 | 34,3 | - | 38,9 | 33,0 | - | 38,7 | 32,7 | - | 37,8 | 31,4 | - |
| 62 | 36,9 | 31,6 | 26,0 | 36,2 | 30,8 | - | 35,0 | 29,4 | - | 34,8 | 29,0 | - | 33,9 | 27,8 | - |
| 66 | - | 28,6 | 23,2 | 32,8 | 27,7 | 22,1 | 31,7 | 26,2 | - | 31,4 | 25,8 | - | 30,5 | 24,6 | - |
| 70 | - | 25,9 | 20,8 | 30,0 | 25,0 | 19,7 | 28,8 | 23,5 | 18,1 | 28,5 | 23,1 | - | 27,6 | 21,9 | - |
| 72 | - | 24,7 | 19,7 | - | 23,8 | 18,7 | 27,5 | 22,3 | 17,0 | 27,2 | 21,8 | - | 26,3 | 20,6 | - |
| 74 | - | - | 18,7 | - | 22,6 | 17,6 | 26,3 | 21,1 | 16,0 | 25,9 | 20,7 | 15,5 | 25,0 | 19,5 | - |
| 78 | - | - | 16,9 | - | 20,6 | 15,8 | - | 19,0 | 14,2 | 23,7 | 18,6 | 13,7 | 22,6 | 17,4 | 12,4 |
| 82 | - | - | - | - | - | 14,2 | - | 17,2 | 12,6 | 21,7 | 16,7 | 12,0 | 20,5 | 15,5 | 10,7 |
| 84 | - | - | - | - | - | 13,5 | - | 16,4 | 11,8 | - | 15,9 | 11,3 | 19,6 | 14,6 | 10,0 |
| 86 | - | - | - | - | - | 12,8 | - | - | 11,2 | - | 15,1 | 10,6 | 18,7 | 13,8 | 9,3 |
| 90 | - | - | - | - | - | - | - | - | 9,9 | - | 13,6 | 9,3 | - | 12,4 | 8,0 |
| 94 | - | - | - | - | - | - | - | - | - | - | - | 8,2 | - | 11,1 | 6,9 |
| 96 | - | - | - | - | - | - | - | - | - | - | - | 7,7 | - | 10,5 | 6,3 |
| 98 | - | - | - | - | - | - | - | - | - | - | - | 7,2 | - | - | 5,8 |
| 102 | - | - | - | - | - | - | - | - | - | - | - | - | - | - | 5,0 |

**Remarks · Bemerkungen · Remarques**

Main boom angle 85°, 75° and 65°, capacities for intermediate boom positions are calculated by the crane control system IC-1
Hauptauslegerwinkel 85°, 75° und 65°, Traglasten für Zwischenstellungen des Hauptauslegers werden von der Kransteuerung IC-1 berechnet
Jarret de flèche principale 85°, 75° et 65°, le système de commande de la grue IC-1 calcule les charges pour les positions intermédiaires de la flèche

# SW LIFTING CAPACITIES · TRAGFÄHIGKEITEN · CAPACITÉS DE LEVAGE

200 t | 14 m x 14 m | 360° | DIN/ISO

54 m

| | 24 m | | | 30 m | | | 36 m | | | 42 m | | | 48 m | | | 54 m | | |
|---|---|---|---|---|---|---|---|---|---|---|---|---|---|---|---|---|---|---|
| | 85° | 75° | 65° | 85° | 75° | 65° | 85° | 75° | 65° | 85° | 75° | 65° | 85° | 75° | 65° | 85° | 75° | 65° |
| m | t | t | t | t | t | t | t | t | t | t | t | t | t | t | t | t | t | t |
| 16 | 183,0 | - | - | - | - | - | - | - | - | - | - | - | - | - | - | - | - | - |
| 18 | 183,0 | - | - | 164,0 | - | - | - | - | - | - | - | - | - | - | - | - | - | - |
| 20 | 171,0 | - | - | 164,0 | - | - | 142,0 | - | - | - | - | - | - | - | - | - | - | - |
| 22 | 161,0 | - | - | 161,0 | - | - | 142,0 | - | - | 123,0 | - | - | - | - | - | - | - | - |
| 24 | 150,0 | - | - | 146,0 | - | - | 139,0 | - | - | 123,0 | - | - | 107,0 | - | - | - | - | - |
| 26 | 136,0 | - | - | 134,0 | - | - | 130,0 | - | - | 122,0 | - | - | 107,0 | - | - | 95,0 | - | - |
| 28 | 122,0 | - | - | 121,0 | - | - | 120,0 | - | - | 117,0 | - | - | 107,0 | - | - | 95,0 | - | - |
| 30 | 110,0 | 98,5 | - | 110,0 | - | - | 109,0 | - | - | 107,0 | - | - | 103,0 | - | - | 95,0 | - | - |
| 32 | - | 90,0 | - | 101,0 | 89,0 | - | 100,2 | - | - | 98,7 | - | - | 96,2 | - | - | 91,5 | - | - |
| 34 | - | 82,5 | - | 92,0 | 81,5 | - | 91,5 | - | - | 90,5 | - | - | 89,5 | - | - | 88,0 | - | - |
| 36 | - | 76,5 | - | - | 75,0 | - | 84,7 | 74,0 | - | 83,7 | - | - | 83,0 | - | - | 81,7 | - | - |
| 38 | - | 70,5 | - | - | 69,5 | - | 78,0 | 68,5 | - | 77,0 | 67,5 | - | 76,5 | - | - | 75,5 | - | - |
| 40 | - | 66,0 | - | - | 65,0 | - | 73,0 | 64,0 | - | 72,0 | 62,5 | - | 71,5 | - | - | 70,5 | - | - |
| 42 | - | - | 54,0 | - | 60,5 | - | 68,0 | 59,5 | - | 67,0 | 58,5 | - | 66,5 | 57,5 | - | 65,5 | - | - |
| 44 | - | - | 50,5 | - | 56,5 | - | - | 55,5 | - | 63,0 | 54,5 | - | 62,5 | 53,5 | - | 61,5 | 52,5 | - |
| 46 | - | - | 47,8 | - | - | 46,5 | - | 52,5 | - | 59,0 | 51,0 | - | 58,5 | 50,5 | - | 57,5 | 49,2 | - |
| 50 | - | - | - | - | - | 41,3 | - | 46,7 | 40,0 | - | 45,6 | - | 52,0 | 44,7 | - | 50,5 | 43,4 | - |
| 54 | - | - | - | - | - | 37,0 | - | - | 35,7 | - | 40,8 | 34,4 | - | 39,9 | - | 45,6 | 38,6 | - |
| 56 | - | - | - | - | - | - | - | - | 33,8 | - | 38,7 | 32,4 | - | 37,8 | - | 43,3 | 36,6 | - |
| 58 | - | - | - | - | - | - | - | - | 32,1 | - | - | 30,7 | - | 35,9 | 29,5 | 41,1 | 34,6 | - |
| 62 | - | - | - | - | - | - | - | - | - | - | - | 27,6 | - | 32,5 | 26,4 | - | 31,2 | 24,7 |
| 66 | - | - | - | - | - | - | - | - | - | - | - | 25,0 | - | - | 23,7 | - | 28,3 | 22,1 |
| 68 | - | - | - | - | - | - | - | - | - | - | - | - | - | - | 22,5 | - | 27,0 | 20,9 |
| 70 | - | - | - | - | - | - | - | - | - | - | - | - | - | - | 21,5 | - | - | 19,8 |
| 74 | - | - | - | - | - | - | - | - | - | - | - | - | - | - | - | - | - | 17,8 |

| | 60 m | | | 66 m | | | 72 m | | | 78 m | | | 84 m | | |
|---|---|---|---|---|---|---|---|---|---|---|---|---|---|---|---|
| | 85° | 75° | 65° | 85° | 75° | 65° | 85° | 75° | 65° | 85° | 75° | 65° | 85° | 75° | 65° |
| m | t | t | t | t | t | t | t | t | t | t | t | t | t | t | t |
| 28 | 82,0 | - | - | - | - | - | - | - | - | - | - | - | - | - | - |
| 30 | 82,0 | - | - | 73,0 | - | - | - | - | - | - | - | - | - | - | - |
| 34 | 81,0 | - | - | 73,0 | - | - | 64,0 | - | - | 56,0 | - | - | - | - | - |
| 38 | 74,0 | - | - | 71,0 | - | - | 63,0 | - | - | 56,0 | - | - | 48,0 | - | - |
| 42 | 64,5 | - | - | 64,0 | - | - | 62,0 | - | - | 55,0 | - | - | 48,0 | - | - |
| 46 | 56,5 | 48,4 | - | 56,0 | - | - | 55,0 | - | - | 54,0 | - | - | 47,0 | - | - |
| 50 | 50,0 | 42,6 | - | 49,7 | 41,8 | - | 48,5 | - | - | 48,0 | - | - | 46,0 | - | - |
| 52 | 47,4 | 40,1 | - | 46,9 | 39,3 | - | 45,8 | 38,0 | - | 45,4 | - | - | 44,0 | - | - |
| 54 | 44,9 | 37,8 | - | 44,2 | 37,0 | - | 43,1 | 35,7 | - | 42,9 | - | - | 42,0 | - | - |
| 56 | 42,6 | 35,8 | - | 41,9 | 34,9 | - | 40,8 | 33,5 | - | 40,6 | 33,1 | - | 39,7 | - | - |
| 58 | 40,4 | 33,8 | - | 39,7 | 33,0 | - | 38,6 | 31,5 | - | 38,3 | 31,1 | - | 37,4 | 29,9 | - |
| 62 | 36,5 | 30,4 | - | 35,8 | 29,5 | - | 34,7 | 27,9 | - | 34,4 | 27,5 | - | 33,5 | 26,3 | - |
| 66 | - | 27,3 | 21,0 | 32,5 | 26,4 | - | 31,4 | 24,9 | - | 31,1 | 24,5 | - | 30,2 | 23,2 | - |
| 70 | - | 24,7 | 18,7 | 29,7 | 23,7 | 17,6 | 28,5 | 22,2 | - | 28,2 | 21,8 | - | 27,3 | 20,6 | - |
| 74 | - | 22,4 | 16,7 | - | 21,4 | 15,6 | 26,0 | 19,9 | 14,0 | 25,6 | 19,5 | - | 24,7 | 18,2 | - |
| 78 | - | - | 15,0 | - | 19,4 | 13,9 | - | 17,9 | 12,3 | 23,4 | 17,4 | 11,7 | 22,3 | 16,2 | - |
| 80 | - | - | 14,2 | - | 18,5 | 13,1 | - | 16,9 | 11,5 | 22,3 | 16,5 | 10,9 | 21,2 | 15,2 | - |
| 82 | - | - | 13,5 | - | - | 12,4 | - | 16,1 | 10,7 | 21,3 | 15,6 | 10,2 | 20,2 | 14,4 | 8,9 |
| 86 | - | - | - | - | - | 11,0 | - | 14,6 | 9,4 | - | 14,0 | 8,8 | 18,3 | 12,7 | 7,5 |
| 90 | - | - | - | - | - | - | - | - | 8,2 | - | 12,6 | 7,6 | - | 11,3 | 6,3 |
| 92 | - | - | - | - | - | - | - | - | 7,7 | - | 12,0 | 7,1 | - | 10,7 | 5,7 |
| 94 | - | - | - | - | - | - | - | - | 7,2 | - | - | 6,5 | - | 10,0 | 5,2 |
| 96 | - | - | - | - | - | - | - | - | - | - | - | 6,0 | - | 9,5 | 4,7 |
| 98 | - | - | - | - | - | - | - | - | - | - | - | 5,6 | - | - | 4,2 |
| 102 | - | - | - | - | - | - | - | - | - | - | - | - | - | - | - |

**Remarks · Bemerkungen · Remarques**

Main boom angle 85°, 75° and 65°, capacities for intermediate boom positions are calculated by the crane control system IC-1
Hauptauslegerwinkel 85°, 75° und 65°, Traglasten für Zwischenstellungen des Hauptauslegers werden von der Kransteuerung IC-1 berechnet
Jarret de flèche principale 85°, 75° et 65°, le système de commande de la grue IC-1 calcule les charges pour les positions intermédiaires de la flèche

autovictor

# SW LIFTING CAPACITIES · TRAGFÄHIGKEITEN · CAPACITÉS DE LEVAGE

200 t | 14 m x 14 m | 360° | DIN/ISO

60 m

| | 24 m | | | 30 m | | | 36 m | | | 42 m | | | 48 m | | | 54 m | | |
|---|---|---|---|---|---|---|---|---|---|---|---|---|---|---|---|---|---|---|
| | 85° | 75° | 65° | 85° | 75° | 65° | 85° | 75° | 65° | 85° | 75° | 65° | 85° | 75° | 65° | 85° | 75° | 65° |
| m | t | t | t | t | t | t | t | t | t | t | t | t | t | t | t | t | t | t |
| 18 | 168,0 | - | - | - | - | - | - | - | - | - | - | - | - | - | - | - | - | - |
| 20 | 158,0 | - | - | 144,0 | - | - | 132,0 | - | - | - | - | - | - | - | - | - | - | - |
| 22 | 149,0 | - | - | 137,0 | - | - | 132,0 | - | - | 110,0 | - | - | - | - | - | - | - | - |
| 24 | 140,0 | - | - | 130,0 | - | - | 132,0 | - | - | 110,0 | - | - | 96,0 | - | - | - | - | - |
| 26 | 131,0 | - | - | 124,0 | - | - | 123,0 | - | - | 110,0 | - | - | 96,0 | - | - | 86,0 | - | - |
| 28 | 121,0 | - | - | 117,0 | - | - | 116,0 | - | - | 108,0 | - | - | 96,0 | - | - | 86,0 | - | - |
| 30 | 110,0 | - | - | 109,0 | - | - | 108,0 | - | - | 105,0 | - | - | 95,0 | - | - | 86,0 | - | - |
| 32 | - | 87,5 | - | 100,2 | - | - | 99,5 | - | - | 97,2 | - | - | 91,5 | - | - | 84,5 | - | - |
| 34 | - | 80,5 | - | 91,5 | 79,0 | - | 91,0 | - | - | 89,5 | - | - | 88,0 | - | - | 83,0 | - | - |
| 38 | - | 69,0 | - | - | 67,5 | - | 78,0 | 66,5 | - | 76,5 | - | - | 76,0 | - | - | 74,0 | - | - |
| 40 | - | 64,0 | - | - | 63,0 | - | 72,7 | 62,0 | - | 71,5 | 60,5 | - | 71,0 | - | - | 69,5 | - | - |
| 42 | - | - | - | - | 59,0 | - | 67,5 | 57,5 | - | 66,5 | 56,5 | - | 66,0 | 55,5 | - | 65,0 | - | - |
| 46 | - | - | 45,1 | - | 51,5 | - | - | 50,5 | - | 58,5 | 49,7 | - | 58,0 | 48,8 | - | 57,0 | 47,5 | - |
| 50 | - | - | 40,1 | - | - | 38,7 | - | 45,2 | - | - | 44,0 | - | 51,5 | 43,1 | - | 50,5 | 41,8 | - |
| 52 | - | - | - | - | - | 36,5 | - | 42,7 | - | - | 41,6 | - | 48,9 | 40,7 | - | 47,8 | 39,4 | - |
| 54 | - | - | - | - | - | 34,5 | - | - | 32,9 | - | 39,3 | - | 46,3 | 38,5 | - | 45,2 | 37,2 | - |
| 58 | - | - | - | - | - | - | - | - | 29,4 | - | 35,4 | 28,0 | - | 34,5 | - | 40,7 | 33,2 | - |
| 62 | - | - | - | - | - | - | - | - | 26,5 | - | - | 25,0 | - | 31,2 | 23,9 | - | 29,8 | - |
| 64 | - | - | - | - | - | - | - | - | - | - | - | 23,7 | - | 29,8 | 22,5 | - | 28,3 | - |
| 66 | - | - | - | - | - | - | - | - | - | - | - | 22,5 | - | - | 21,3 | - | 26,9 | 19,7 |
| 70 | - | - | - | - | - | - | - | - | - | - | - | - | - | - | 19,2 | - | 24,3 | 17,5 |
| 74 | - | - | - | - | - | - | - | - | - | - | - | - | - | - | 17,3 | - | - | 15,6 |
| 78 | - | - | - | - | - | - | - | - | - | - | - | - | - | - | - | - | - | 14,0 |

| | 60 m | | | 66 m | | | 72 m | | | 78 m | | | 84 m | | |
|---|---|---|---|---|---|---|---|---|---|---|---|---|---|---|---|
| | 85° | 75° | 65° | 85° | 75° | 65° | 85° | 75° | 65° | 85° | 75° | 65° | 85° | 75° | 65° |
| m | t | t | t | t | t | t | t | t | t | t | t | t | t | t | t |
| 28 | 75,0 | - | - | - | - | - | - | - | - | - | - | - | - | - | - |
| 30 | 75,0 | - | - | 66,0 | - | - | - | - | - | - | - | - | - | - | - |
| 34 | 74,0 | - | - | 66,0 | - | - | 58,0 | - | - | 50,0 | - | - | - | - | - |
| 38 | 71,0 | - | - | 64,0 | - | - | 58,0 | - | - | 50,0 | - | - | 44,0 | - | - |
| 42 | 64,0 | - | - | 62,0 | - | - | 56,0 | - | - | 49,0 | - | - | 44,0 | - | - |
| 46 | 56,0 | - | - | 55,0 | - | - | 54,0 | - | - | 48,0 | - | - | 43,0 | - | - |
| 48 | 52,9 | 43,7 | - | 52,1 | - | - | 51,0 | - | - | 47,0 | - | - | 42,5 | - | - |
| 50 | 49,9 | 41,0 | - | 49,2 | - | - | 48,0 | - | - | 46,0 | - | - | 42,0 | - | - |
| 52 | 47,2 | 38,6 | - | 46,5 | 37,7 | - | 45,3 | - | - | 44,0 | - | - | 41,5 | - | - |
| 54 | 44,5 | 36,4 | - | 43,9 | 35,5 | - | 42,7 | 33,9 | - | 42,0 | - | - | 41,0 | - | - |
| 56 | 42,2 | 34,3 | - | 41,6 | 33,3 | - | 40,4 | 31,7 | - | 40,0 | 31,3 | - | 39,0 | - | - |
| 58 | 40,0 | 32,4 | - | 39,3 | 31,4 | - | 38,2 | 29,8 | - | 38,0 | 29,4 | - | 37,0 | - | - |
| 60 | 38,1 | 30,5 | - | 37,4 | 29,6 | - | 36,2 | 28,0 | - | 36,0 | 27,6 | - | 35,1 | 26,3 | - |
| 62 | 36,2 | 28,9 | - | 35,5 | 27,9 | - | 34,3 | 26,3 | - | 34,1 | 25,9 | - | 33,2 | 24,7 | - |
| 66 | - | 25,9 | 18,6 | 32,2 | 24,9 | - | 31,0 | 23,4 | - | 30,8 | 23,0 | - | 29,8 | 21,7 | - |
| 70 | - | 23,3 | 16,4 | 29,3 | 22,3 | 15,3 | 28,1 | 20,8 | - | 27,9 | 20,4 | - | 26,9 | 19,1 | - |
| 74 | - | 21,1 | 14,5 | - | 20,1 | 13,4 | 25,7 | 18,5 | 11,7 | 25,3 | 18,1 | - | 24,3 | 16,9 | - |
| 76 | - | 20,1 | 13,7 | - | 19,1 | 12,6 | - | 17,5 | 10,9 | 24,1 | 17,1 | - | 23,1 | 15,8 | - |
| 78 | - | - | 12,9 | - | 18,1 | 11,8 | - | 16,6 | 10,1 | 23,0 | 16,1 | 9,6 | 21,9 | 14,9 | - |
| 82 | - | - | 11,5 | - | 16,5 | 10,4 | - | 14,8 | 8,7 | 21,0 | 14,4 | 8,2 | 19,8 | 13,1 | 6,8 |
| 86 | - | - | 10,3 | - | - | 9,1 | - | 13,3 | 7,4 | - | 12,8 | 6,9 | 18,0 | 11,5 | 5,5 |
| 90 | - | - | - | - | - | 8,0 | - | - | 6,3 | - | 11,4 | 5,7 | - | 10,2 | 4,4 |
| 92 | - | - | - | - | - | - | - | - | 5,8 | - | 10,8 | 5,2 | - | 9,5 | - |
| 94 | - | - | - | - | - | - | - | - | 5,3 | - | - | 4,7 | - | 8,9 | - |
| 96 | - | - | - | - | - | - | - | - | - | - | - | 4,3 | - | 8,4 | - |
| 98 | - | - | - | - | - | - | - | - | - | - | - | - | - | 7,9 | - |
| 102 | - | - | - | - | - | - | - | - | - | - | - | - | - | - | - |

**Remarks · Bemerkungen · Remarques**

Main boom angle 85°, 75° and 65°, capacities for intermediate boom positions are calculated by the crane control system IC-1
Hauptauslegerwinkel 85°, 75° und 65°, Traglasten für Zwischenstellungen des Hauptauslegers werden von der Kransteuerung IC-1 berechnet
Jarret de flèche principale 85°, 75° et 65°, le système de commande de la grue IC-1 calcule les charges pour les positions intermédiaires de la flèche

# SW LIFTING CAPACITIES · TRAGFÄHIGKEITEN · CAPACITÉS DE LEVAGE

200 t | 14 m x 14 m | 360° | DIN/ISO

66 m

| | 24 m | | | 30 m | | | 36 m | | | 42 m | | | 48 m | | | 54 m | | |
|---|---|---|---|---|---|---|---|---|---|---|---|---|---|---|---|---|---|---|
| | 85° | 75° | 65° | 85° | 75° | 65° | 85° | 75° | 65° | 85° | 75° | 65° | 85° | 75° | 65° | 85° | 75° | 65° |
| m | t | t | t | t | t | t | t | t | t | t | t | t | t | t | t | t | t | t |
| 18 | 136,0 | - | - | - | - | - | - | - | - | - | - | - | - | - | - | - | - | - |
| 20 | 136,0 | - | - | 121,0 | - | - | - | - | - | - | - | - | - | - | - | - | - | - |
| 22 | 128,0 | - | - | 121,0 | - | - | 105,0 | - | - | - | - | - | - | - | - | - | - | - |
| 24 | 122,0 | - | - | 113,0 | - | - | 105,0 | - | - | 96,0 | - | - | - | - | - | - | - | - |
| 26 | 115,0 | - | - | 107,0 | - | - | 99,0 | - | - | 96,0 | - | - | 85,0 | - | - | - | - | - |
| 28 | 109,0 | - | - | 102,0 | - | - | 95,0 | - | - | 95,0 | - | - | 85,0 | - | - | 74,0 | - | - |
| 30 | 103,0 | - | - | 97,5 | - | - | 91,0 | - | - | 92,0 | - | - | 84,0 | - | - | 74,0 | - | - |
| 32 | - | 85,0 | - | 93,0 | - | - | 87,2 | - | - | 89,0 | - | - | 81,0 | - | - | 73,0 | - | - |
| 34 | - | 78,0 | - | 88,5 | - | - | 83,5 | - | - | 86,0 | - | - | 78,0 | - | - | 72,0 | - | - |
| 36 | - | 72,0 | - | - | 71,0 | - | 80,0 | - | - | 80,5 | - | - | 76,0 | - | - | 70,5 | - | - |
| 38 | - | 67,0 | - | - | 65,5 | - | 76,5 | 64,5 | - | 75,0 | - | - | 74,0 | - | - | 69,0 | - | - |
| 42 | - | 58,0 | - | - | 57,0 | - | 67,0 | 56,0 | - | 66,0 | 54,5 | - | 65,0 | - | - | 64,0 | - | - |
| 44 | - | - | - | - | 53,5 | - | - | 52,0 | - | 62,0 | 51,0 | - | 61,2 | 50,0 | - | 60,0 | - | - |
| 46 | - | - | - | - | 50,0 | - | - | 49,1 | - | 58,0 | 48,0 | - | 57,5 | 47,1 | - | 56,0 | - | - |
| 48 | - | - | - | - | 47,3 | - | - | 46,2 | - | - | 45,1 | - | 54,2 | 44,2 | - | 53,0 | 42,8 | - |
| 50 | - | - | 37,3 | - | - | 35,7 | - | 43,6 | - | - | 42,4 | - | 51,0 | 41,5 | - | 50,0 | 40,2 | - |
| 54 | - | - | 33,2 | - | - | 31,7 | - | 39,0 | 30,1 | - | 37,9 | - | 45,9 | 37,0 | - | 44,7 | 35,6 | - |
| 58 | - | - | - | - | - | 28,4 | - | - | 26,8 | - | 34,1 | 25,3 | - | 33,2 | - | 40,3 | 31,6 | - |
| 60 | - | - | - | - | - | - | - | - | 25,3 | - | 32,4 | 23,9 | - | 31,4 | - | - | 29,9 | - |
| 62 | - | - | - | - | - | - | - | - | 24,0 | - | - | 22,6 | - | 29,8 | 21,4 | - | 28,3 | - |
| 66 | - | - | - | - | - | - | - | - | - | - | - | 20,2 | - | 27,0 | 19,0 | - | 25,4 | 17,3 |
| 70 | - | - | - | - | - | - | - | - | - | - | - | 18,2 | - | - | 16,9 | - | 22,9 | 15,3 |
| 72 | - | - | - | - | - | - | - | - | - | - | - | - | - | - | 16,0 | - | 21,9 | 14,3 |
| 74 | - | - | - | - | - | - | - | - | - | - | - | - | - | - | 15,2 | - | - | 13,5 |
| 78 | - | - | - | - | - | - | - | - | - | - | - | - | - | - | - | - | - | 12,0 |
| 82 | - | - | - | - | - | - | - | - | - | - | - | - | - | - | - | - | - | 10,7 |
| 86 | - | - | - | - | - | - | - | - | - | - | - | - | - | - | - | - | - | - |

| | 60 m | | | 66 m | | | 72 m | | | 78 m | | | 84 m | | |
|---|---|---|---|---|---|---|---|---|---|---|---|---|---|---|---|
| | 85° | 75° | 65° | 85° | 75° | 65° | 85° | 75° | 65° | 85° | 75° | 65° | 85° | 75° | 65° |
| m | t | t | t | t | t | t | t | t | t | t | t | t | t | t | t |
| 28 | 66,0 | - | - | - | - | - | - | - | - | - | - | - | - | - | - |
| 30 | 66,0 | - | - | 58,0 | - | - | - | - | - | - | - | - | - | - | - |
| 34 | 66,0 | - | - | 58,0 | - | - | 51,0 | - | - | 44,0 | - | - | - | - | - |
| 38 | 63,0 | - | - | 57,0 | - | - | 51,0 | - | - | 44,0 | - | - | 39,0 | - | - |
| 42 | 60,0 | - | - | 55,0 | - | - | 49,0 | - | - | 44,0 | - | - | 39,0 | - | - |
| 46 | 55,0 | - | - | 52,0 | - | - | 47,0 | - | - | 43,0 | - | - | 38,0 | - | - |
| 50 | 49,0 | 39,4 | - | 48,0 | - | - | 45,0 | - | - | 42,0 | - | - | 37,0 | - | - |
| 52 | 46,5 | 36,9 | - | 45,5 | 35,9 | - | 43,5 | - | - | 41,0 | - | - | 36,5 | - | - |
| 54 | 44,1 | 34,7 | - | 43,0 | 33,6 | - | 42,0 | - | - | 40,0 | - | - | 36,0 | - | - |
| 56 | 41,8 | 32,6 | - | 40,9 | 31,6 | - | 39,5 | 30,0 | - | 38,5 | - | - | 35,0 | - | - |
| 58 | 39,6 | 30,7 | - | 38,9 | 29,7 | - | 37,0 | 28,1 | - | 37,0 | 27,7 | - | 34,0 | - | - |
| 62 | 35,8 | 27,3 | - | 35,1 | 26,3 | - | 33,9 | 24,7 | - | 33,0 | 24,3 | - | 32,0 | 23,0 | - |
| 66 | 32,5 | 24,4 | - | 31,8 | 23,4 | - | 30,6 | 21,8 | - | 30,4 | 21,4 | - | 29,0 | 20,2 | - |
| 70 | - | 21,9 | 14,1 | 29,0 | 20,9 | - | 27,8 | 19,3 | - | 27,5 | 18,9 | - | 26,4 | 17,7 | - |
| 74 | - | 19,7 | 12,4 | - | 18,7 | 11,2 | 25,3 | 17,2 | - | 25,0 | 16,8 | - | 23,9 | 15,5 | - |
| 76 | - | 18,8 | 11,6 | - | 17,7 | 10,5 | 24,2 | 16,2 | - | 23,8 | 15,8 | - | 22,7 | 14,5 | - |
| 78 | - | - | 10,8 | - | 16,8 | 9,7 | 23,1 | 15,3 | 8,0 | 22,6 | 14,8 | - | 21,5 | 13,6 | - |
| 82 | - | - | 9,5 | - | 15,2 | 8,4 | - | 13,6 | 6,7 | 20,6 | 13,1 | 6,1 | 19,4 | 11,9 | - |
| 86 | - | - | 8,3 | - | - | 7,2 | - | 12,1 | 5,5 | - | 11,6 | 4,9 | 17,6 | 10,3 | - |
| 88 | - | - | - | - | - | 6,6 | - | 11,5 | 4,9 | - | 10,9 | 4,4 | - | 9,7 | - |
| 90 | - | - | - | - | - | 6,2 | - | - | 4,4 | - | 10,3 | - | - | 9,0 | - |
| 94 | - | - | - | - | - | 5,3 | - | - | - | - | 9,1 | - | - | 7,8 | - |
| 98 | - | - | - | - | - | - | - | - | - | - | - | - | - | 6,8 | - |
| 100 | - | - | - | - | - | - | - | - | - | - | - | - | - | 6,3 | - |
| 102 | - | - | - | - | - | - | - | - | - | - | - | - | - | - | - |

**Remarks · Bemerkungen · Remarques**

see page 42 · siehe Seite 42 · voir page 42

autovictor

# SWSL WORKING RANGES · ARBEITSBEREICHE · PORTÉES

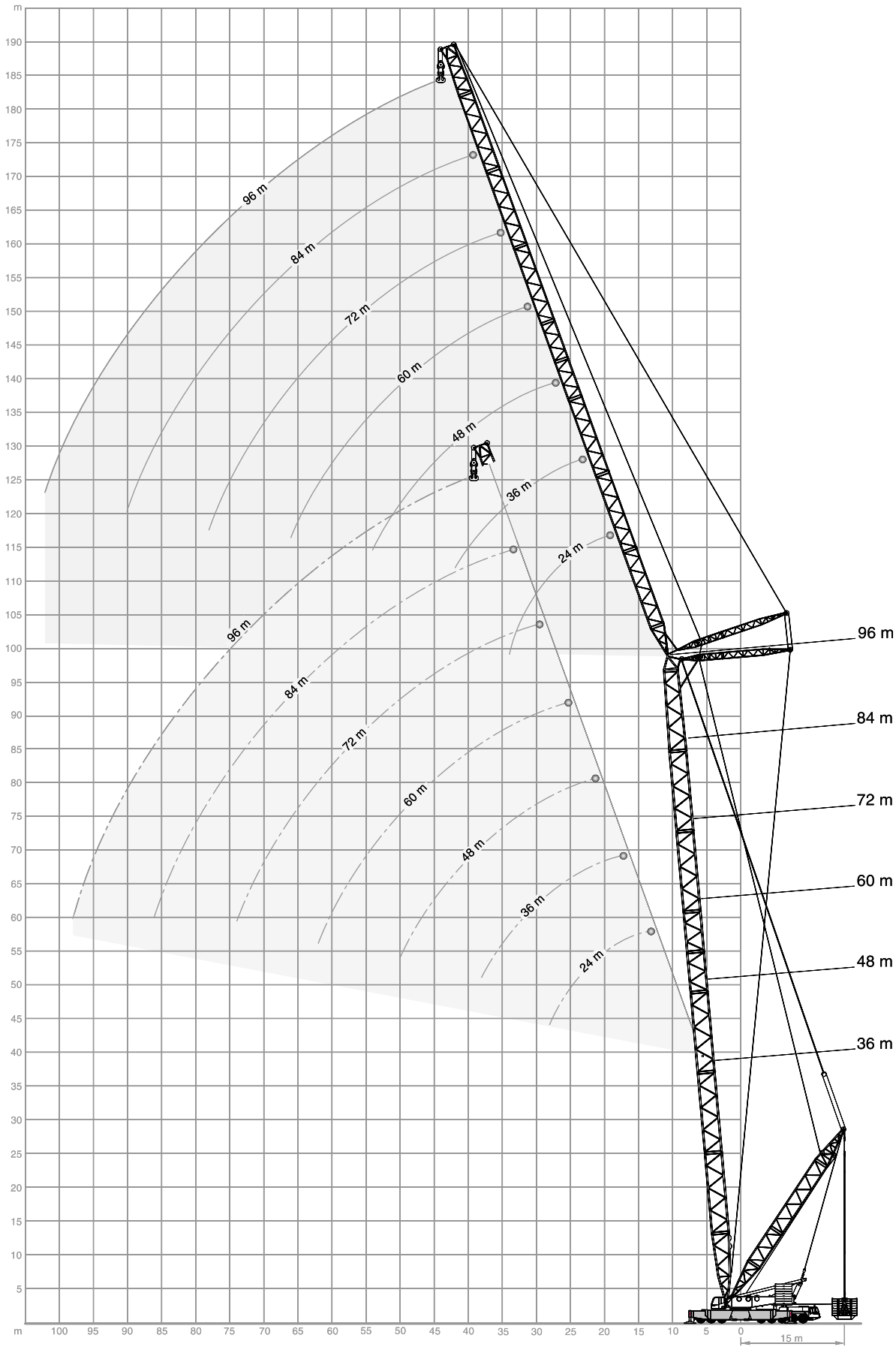

# SWSL /SFSL15°/ HSWSL LIFTING CAPACITIES · TRAGFÄHIG-KEITEN · CAPACITÉS DE LEVAGE

14 m x 14 m | 11-15 m | 360° | DIN/ISO

## 36 m + 24 m

| | SWSL | | | | | SFSL | HSWSL |
|---|---|---|---|---|---|---|---|
| | 0 t | 0 t-250 t | | | | | |
| | 200 t | 160 t | | | | | |
| | 85° | 85° | 75° | 65° | 55° | | 85° |
| m | t | t | t | t | t | t | t |
| 16 | 208,0 | 300,0 | - | - | - | 300,0 | - |
| 18 | 180,0 | 300,0 | - | - | - | 300,0 | - |
| 20 | 159,0 | 300,0 | - | - | - | 300,0 | - |
| 22 | 142,0 | 273,0 | - | - | - | 283,0 | - |
| 24 | 127,0 | 247,0 | - | - | - | 263,0 | - |
| 26 | 116,0 | 214,0 | 218,0 | - | - | 246,0 | - |
| 28 | 106,0 | 182,0 | 204,0 | - | - | 231,0 | - |
| 30 | - | - | 191,0 | - | - | 217,0 | - |
| 34 | - | - | 170,0 | 167,0 | - | 189,0 | - |
| 38 | - | - | - | 155,0 | - | 161,0 | - |
| 40 | - | - | - | 147,0 | - | 151,5 | - |
| 42 | - | - | - | - | 129,0 | 142,0 | - |
| 46 | - | - | - | - | 121,0 | 123,0 | - |
| 50 | - | - | - | - | - | 107,0 | - |
| 54 | - | - | - | - | - | 90,5 | - |

## 36 m + 36 m

| m | t | t | t | t | t | t | t |
|---|---|---|---|---|---|---|---|
| 18 | 179,0 | 257,0 | - | - | - | - | - |
| 20 | 157,0 | 257,0 | - | - | - | 253,0 | - |
| 22 | 140,0 | 253,0 | - | - | - | 249,0 | - |
| 24 | 126,0 | 239,0 | - | - | - | 245,0 | - |
| 26 | 114,0 | 222,0 | - | - | - | 239,0 | - |
| 28 | 104,0 | 204,0 | - | - | - | 224,0 | - |
| 30 | 95,5 | 187,0 | 173,0 | - | - | 208,0 | - |
| 34 | 82,0 | 152,0 | 163,0 | - | - | 185,0 | - |
| 38 | 71,0 | 123,0 | 147,0 | - | - | 167,0 | - |
| 42 | - | - | 134,0 | 134,0 | - | 148,0 | - |
| 46 | - | - | 118,0 | 124,0 | - | 129,0 | - |
| 50 | - | - | - | 113,0 | - | 115,0 | - |
| 52 | - | - | - | 108,0 | 103,0 | 108,0 | - |
| 54 | - | - | - | - | 99,0 | 101,0 | - |
| 58 | - | - | - | - | 92,5 | 90,0 | - |
| 62 | - | - | - | - | - | 78,0 | - |
| 66 | - | - | - | - | - | 66,0 | - |

## 36 m + 48 m

| m | t | t | t | t | t | t | t |
|---|---|---|---|---|---|---|---|
| 22 | 138,0 | 187,0 | - | - | - | - | - |
| 24 | 124,0 | 187,0 | - | - | - | 186,0 | - |
| 26 | 112,0 | 187,0 | - | - | - | 185,0 | - |
| 28 | 102,0 | 180,0 | - | - | - | 183,0 | - |
| 30 | 93,5 | 172,0 | - | - | - | 181,0 | - |
| 34 | 80,0 | 156,0 | - | - | - | 164,0 | - |
| 36 | 74,5 | 146,0 | 139,0 | - | - | 156,5 | - |
| 38 | 69,0 | 136,0 | 139,0 | - | - | 149,0 | - |
| 42 | 60,5 | 116,0 | 129,0 | - | - | 138,0 | - |
| 46 | 53,5 | 99,5 | 118,0 | - | - | 126,0 | - |
| 50 | 47,9 | 84,0 | 109,0 | 107,0 | - | 115,0 | - |
| 54 | - | - | 97,5 | 99,5 | - | 103,0 | - |
| 58 | - | - | 82,0 | 93,0 | - | 94,0 | - |
| 60 | - | - | - | 89,5 | 82,0 | 89,2 | - |
| 62 | - | - | - | 86,5 | 81,0 | 84,5 | - |
| 64 | - | - | - | 83,0 | 78,5 | 79,2 | - |
| 66 | - | - | - | - | 76,0 | 75,0 | - |
| 68 | - | - | - | - | 73,5 | 71,0 | - |
| 70 | - | - | - | - | - | 67,0 | - |
| 74 | - | - | - | - | - | 58,5 | - |
| 78 | - | - | - | - | - | 49,8 | - |

## 36 m + 60 m

| | SWSL | | | | | SFSL | HSWSL |
|---|---|---|---|---|---|---|---|
| | 0 t | 0 t-250 t | | | | | |
| | 200 t | 160 t | | | | | |
| | 85° | 85° | 75° | 65° | 55° | | 85° |
| m | t | t | t | t | t | t | t |
| 26 | 110,0 | 134,0 | - | - | - | - | - |
| 28 | 100,0 | 134,0 | - | - | - | 134,0 | - |
| 30 | 91,5 | 134,0 | - | - | - | 133,0 | - |
| 34 | 77,5 | 128,0 | - | - | - | 133,0 | - |
| 38 | 67,0 | 119,0 | - | - | - | 130,0 | - |
| 42 | 58,5 | 110,0 | 117,0 | - | - | 124,0 | - |
| 46 | 51,5 | 100,0 | 112,0 | - | - | 116,0 | - |
| 50 | 45,6 | 90,0 | 102,0 | - | - | 105,0 | - |
| 54 | 40,7 | 78,5 | 96,0 | - | - | 94,0 | - |
| 56 | 38,6 | 73,5 | 93,0 | 83,5 | - | 90,2 | - |
| 58 | 36,6 | 68,5 | 88,5 | 83,5 | - | 86,5 | - |
| 62 | 32,9 | 58,5 | 78,0 | 77,5 | - | 81,5 | - |
| 66 | - | - | 68,0 | 72,0 | - | 76,5 | - |
| 70 | - | - | 58,0 | 67,5 | 65,0 | 70,5 | - |
| 74 | - | - | - | 63,0 | 62,0 | 62,5 | - |
| 76 | - | - | - | 60,5 | 60,5 | 59,5 | - |
| 78 | - | - | - | - | 59,0 | 57,0 | - |
| 80 | - | - | - | - | 57,5 | 53,5 | - |
| 82 | - | - | - | - | - | 50,0 | - |
| 86 | - | - | - | - | - | 43,7 | - |
| 90 | - | - | - | - | - | 37,0 | - |

## 36 m + 72 m

| m | t | t | t | t | t | t | t |
|---|---|---|---|---|---|---|---|
| 30 | 89,0 | 96,0 | - | - | - | - | - |
| 34 | 75,0 | 96,0 | - | - | - | 95,0 | - |
| 38 | 64,5 | 94,0 | - | - | - | 94,0 | - |
| 42 | 56,0 | 91,0 | - | - | - | 93,0 | - |
| 46 | 49,1 | 87,0 | - | - | - | 91,0 | - |
| 48 | 46,2 | 85,0 | 87,0 | - | - | 89,5 | - |
| 50 | 43,3 | 83,0 | 86,0 | - | - | 88,0 | - |
| 54 | 38,4 | 79,0 | 84,0 | - | - | 83,0 | - |
| 58 | 34,2 | 72,0 | 81,0 | - | - | 78,0 | - |
| 62 | 30,6 | 64,0 | 78,0 | - | - | 73,0 | - |
| 64 | 29,0 | 60,2 | 75,5 | 67,0 | - | 70,5 | - |
| 66 | 27,5 | 56,5 | 71,5 | 66,5 | - | 68,0 | - |
| 70 | 24,7 | 49,8 | 64,0 | 63,5 | - | 64,0 | - |
| 74 | 22,3 | 42,8 | 57,0 | 60,5 | - | 61,0 | - |
| 78 | - | - | 50,0 | 57,0 | 54,5 | 57,5 | - |
| 80 | - | - | 46,8 | 55,5 | 54,5 | 55,5 | - |
| 82 | - | - | - | 54,0 | 53,5 | 53,5 | - |
| 86 | - | - | - | 49,8 | 50,0 | 48,3 | - |
| 90 | - | - | - | - | 47,1 | 42,7 | - |
| 92 | - | - | - | - | 45,6 | 40,0 | - |
| 94 | - | - | - | - | - | 37,3 | - |
| 98 | - | - | - | - | - | 32,1 | - |
| 102 | - | - | - | - | - | 26,9 | - |

**Remarks · Bemerkungen · Remarques**

Main boom angle 85°, 75°, 65° and 55°; capacities for intermediate boom positions are calculated by the crane control system IC-1

Hauptauslegerwinkel 85°, 75°, 65° und 55°; Traglasten für Zwischenstellungen des Hauptauslegers werden von der Kransteuerung IC-1 berechnet

Jarret de flèche principale 85°, 75°, 65° et 55°; le système de commande de la grue IC-1 calcule les charges pour les positions intermédiaires de la flèche

For HSWSL a boom power-kit is required · Für HSWSL ist ein Ausleger-Verstärkungs-Kit erforderlich · Un kit à fortifier de flèche principale est nécessaire pour HSWSL

autovictor

# SWSL /SFSL15°/ HSWSL

**LIFTING CAPACITIES · TRAGFÄHIG-KEITEN · CAPACITÉS DE LEVAGE**

14 m x 14 m | 11-15 m | 360° | DIN/ISO

## 36 m + 84 m

| | SWSL | | | | | SFSL | HSWSL |
|---|---|---|---|---|---|---|---|
| | 0 t | 0 t-250 t | | | | | |
| | 200 t | 160 t | | | | | |
| | 85° | 85° | 75° | 65° | 55° | | 85° |
| m | t | t | t | t | t | t | t |
| 34 | 64,0 | 69,0 | - | - | - | - | - |
| 38 | 63,0 | 69,0 | - | - | - | 69,0 | - |
| 42 | 54,5 | 68,0 | - | - | - | 68,0 | - |
| 46 | 47,7 | 68,0 | - | - | - | 68,0 | - |
| 50 | 41,9 | 67,0 | - | - | - | 67,0 | - |
| 54 | 37,0 | 66,0 | 63,0 | - | - | 66,0 | - |
| 58 | 32,7 | 65,0 | 63,0 | - | - | 64,0 | - |
| 62 | 29,1 | 63,0 | 62,0 | - | - | 62,0 | - |
| 66 | 25,9 | 59,0 | 61,0 | - | - | 60,0 | - |
| 70 | 23,2 | 53,0 | 57,0 | - | - | 57,0 | - |
| 72 | 21,9 | 50,2 | 56,0 | 50,0 | - | 56,0 | - |
| 74 | 20,7 | 47,4 | 56,0 | 50,0 | - | 55,0 | - |
| 78 | 18,5 | 42,2 | 53,0 | 49,8 | - | 52,0 | - |
| 82 | 16,6 | 37,2 | 47,8 | 48,3 | - | 50,0 | - |
| 86 | 14,9 | 31,9 | 42,8 | 46,7 | - | 46,0 | - |
| 88 | - | - | 40,3 | 45,7 | 42,9 | 44,5 | - |
| 90 | - | - | 37,9 | 44,7 | 42,7 | 43,0 | - |
| 92 | - | - | 35,3 | 43,6 | 42,3 | 41,0 | - |
| 94 | - | - | - | 42,5 | 41,7 | 39,0 | - |
| 98 | - | - | - | 37,9 | 39,5 | 36,0 | - |
| 102 | - | - | - | - | 37,1 | 32,0 | - |
| 104 | - | - | - | - | 35,9 | 29,9 | - |
| 106 | - | - | - | - | - | 27,9 | - |
| 110 | - | - | - | - | - | 23,7 | - |
| 114 | - | - | - | - | - | 19,3 | - |

## 48 m + 24 m

| m | t | t | t | t | t | t | t |
|---|---|---|---|---|---|---|---|
| 16 | 206,0 | 296,0 | - | - | - | 298,0 | - |
| 18 | 178,0 | 296,0 | - | - | - | 298,0 | - |
| 20 | 157,0 | 292,0 | - | - | - | 297,0 | - |
| 22 | 140,0 | 277,0 | - | - | - | 296,0 | - |
| 24 | 126,0 | 262,0 | - | - | - | 282,0 | - |
| 26 | 114,0 | 229,0 | - | - | - | 262,0 | - |
| 28 | 104,0 | 196,0 | 208,0 | - | - | 241,0 | - |
| 30 | 96,0 | 162,0 | 205,0 | - | - | 227,0 | - |
| 34 | - | - | 178,0 | - | - | 195,0 | - |
| 38 | - | - | 157,0 | - | - | 170,0 | - |
| 40 | - | - | - | 143,0 | - | 160,0 | - |
| 42 | - | - | - | 135,0 | - | 150,0 | - |
| 46 | - | - | - | 122,0 | - | 133,0 | - |
| 50 | - | - | - | - | - | 120,0 | - |
| 54 | - | - | - | - | - | 104,0 | - |
| 58 | - | - | - | - | - | 90,5 | - |
| 62 | - | - | - | - | - | 80,5 | - |
| 66 | - | - | - | - | - | 68,5 | - |
| 70 | - | - | - | - | - | - | - |

## 48 m + 36 m

| | SWSL | | | | | SFSL | HSWSL |
|---|---|---|---|---|---|---|---|
| | 0 t | 0 t-250 t | | | | | |
| | 200 t | 160 t | | | | | |
| | 85° | 85° | 75° | 65° | 55° | | 85° |
| m | t | t | t | t | t | t | t |
| 20 | 155,0 | 222,0 | - | - | - | - | - |
| 22 | 138,0 | 218,0 | - | - | - | 221,0 | - |
| 24 | 124,0 | 211,0 | - | - | - | 219,0 | - |
| 26 | 112,0 | 203,0 | - | - | - | 218,0 | - |
| 28 | 102,0 | 194,0 | - | - | - | 216,0 | - |
| 30 | 94,0 | 184,0 | - | - | - | 206,0 | - |
| 34 | 80,5 | 159,0 | 164,0 | - | - | 188,0 | - |
| 38 | 70,0 | 129,0 | 152,0 | - | - | 171,0 | - |
| 42 | - | - | 139,0 | - | - | 151,0 | - |
| 46 | - | - | 125,0 | - | - | 134,0 | - |
| 48 | - | - | 119,0 | 114,0 | - | 127,5 | - |
| 50 | - | - | 109,0 | 109,0 | - | 121,0 | - |
| 54 | - | - | - | 99,5 | - | 108,0 | - |
| 56 | - | - | - | 95,5 | - | 103,5 | - |
| 58 | - | - | - | - | 88,0 | 99,0 | - |
| 62 | - | - | - | - | 81,5 | 87,5 | - |
| 64 | - | - | - | - | 78,5 | 82,0 | - |
| 66 | - | - | - | - | - | 76,5 | - |
| 70 | - | - | - | - | - | 69,5 | - |
| 74 | - | - | - | - | - | 60,0 | - |
| 78 | - | - | - | - | - | 51,0 | - |

## 48 m + 48 m

| m | t | t | t | t | t | t | t |
|---|---|---|---|---|---|---|---|
| 24 | 122,0 | 162,0 | - | - | - | - | - |
| 26 | 110,0 | 162,0 | - | - | - | 162,0 | - |
| 28 | 100,0 | 160,0 | - | - | - | 162,0 | - |
| 30 | 92,0 | 157,0 | - | - | - | 162,0 | - |
| 34 | 78,5 | 149,0 | - | - | - | 160,0 | - |
| 38 | 68,0 | 136,0 | - | - | - | 149,0 | - |
| 40 | 63,7 | 128,0 | 136,0 | - | - | 143,0 | - |
| 42 | 59,5 | 120,0 | 133,0 | - | - | 137,0 | - |
| 46 | 52,5 | 102,0 | 123,0 | - | - | 128,0 | - |
| 50 | 46,9 | 86,5 | 112,0 | - | - | 118,0 | - |
| 54 | - | - | 102,0 | 97,5 | - | 108,0 | - |
| 58 | - | - | 93,0 | 90,0 | - | 98,5 | - |
| 60 | - | - | 85,0 | 86,5 | - | 93,7 | - |
| 62 | - | - | - | 83,0 | - | 89,0 | - |
| 66 | - | - | - | 77,0 | - | 82,0 | - |
| 68 | - | - | - | 74,5 | 71,0 | 77,7 | - |
| 70 | - | - | - | - | 69,0 | 73,5 | - |
| 74 | - | - | - | - | 64,5 | 65,5 | - |
| 76 | - | - | - | - | 62,0 | 62,0 | - |
| 78 | - | - | - | - | - | 59,5 | - |
| 82 | - | - | - | - | - | 52,5 | - |
| 86 | - | - | - | - | - | 45,9 | - |
| 90 | - | - | - | - | - | 38,9 | - |

**Remarks · Bemerkungen · Remarques**

Main boom angle 85°, 75°, 65° and 55°; capacities for intermediate boom positions are calculated by the crane control system IC-1
Hauptauslegerwinkel 85°, 75°, 65° und 55°; Traglasten für Zwischenstellungen des Hauptauslegers werden von der Kransteuerung IC-1 berechnet
Jarret de flèche principale 85°, 75°, 65° et 55°; le système de commande de la grue IC-1 calcule les charges pour les positions intermédiaires de la flèche

For HSWSL a boom power-kit is required
Für HSWSL ist ein Ausleger-Verstärkungs-Kit erforderlich
Un kit à fortifier de flèche principale est nécessaire pour HSWSL

# SWSL /SFSL15°/ HSWSL LIFTING CAPACITIES · TRAGFÄHIG-KEITEN · CAPACITÉS DE LEVAGE

14 m x 14 m | 11-15 m | 360° | DIN/ISO

## 48 m + 60 m

| | SWSL | | | | | SFSL | HSWSL |
|---|---|---|---|---|---|---|---|
| | 0 t | 0 t-250 t | | | | | |
| | 200 t | 160 t | | | | | |
| | 85° | 85° | 75° | 65° | 55° | | 85° |
| m | t | t | t | t | t | t | t |
| 28 | 98,5 | 120,0 | - | - | - | - | - |
| 30 | 90,0 | 120,0 | - | - | - | 120,0 | - |
| 34 | 76,0 | 117,0 | - | - | - | 120,0 | - |
| 38 | 65,5 | 112,0 | - | - | - | 120,0 | - |
| 42 | 57,0 | 106,0 | - | - | - | 117,0 | - |
| 46 | 50,0 | 98,0 | 110,0 | - | - | 114,0 | - |
| 50 | 44,6 | 91,0 | 105,0 | - | - | 107,0 | - |
| 54 | 39,8 | 80,5 | 95,0 | - | - | 98,0 | - |
| 58 | 35,6 | 70,0 | 87,0 | - | - | 90,0 | - |
| 62 | 32,1 | 60,0 | 80,0 | 78,0 | - | 83,0 | - |
| 66 | - | - | 74,0 | 74,5 | - | 76,0 | - |
| 70 | - | - | 65,0 | 69,5 | - | 71,0 | - |
| 72 | - | - | 60,0 | 67,0 | - | 68,7 | - |
| 74 | - | - | - | 65,0 | - | 66,5 | - |
| 76 | - | - | - | 63,0 | 57,5 | 64,2 | - |
| 78 | - | - | - | 61,0 | 57,5 | 62,0 | - |
| 80 | - | - | - | 59,0 | 55,5 | 58,7 | - |
| 82 | - | - | - | - | 54,5 | 55,5 | - |
| 86 | - | - | - | - | 51,0 | 49,9 | - |
| 88 | - | - | - | - | 49,9 | 47,6 | - |
| 90 | - | - | - | - | - | 45,3 | - |
| 94 | - | - | - | - | - | 39,7 | - |
| 98 | - | - | - | - | - | 34,2 | - |
| 102 | - | - | - | - | - | 28,6 | - |
| 106 | - | - | - | - | - | - | - |

## 48 m + 72 m

| m | t | t | t | t | t | t | t |
|---|---|---|---|---|---|---|---|
| 34 | 74,0 | 87,0 | - | - | - | 87,0 | - |
| 38 | 63,0 | 86,0 | - | - | - | 86,0 | - |
| 42 | 54,5 | 83,0 | - | - | - | 86,0 | - |
| 46 | 48,0 | 80,0 | - | - | - | 85,0 | - |
| 50 | 42,3 | 77,0 | 79,0 | - | - | 83,0 | - |
| 54 | 37,4 | 74,0 | 79,0 | - | - | 81,0 | - |
| 58 | 33,3 | 71,0 | 78,0 | - | - | 77,0 | - |
| 62 | 29,7 | 65,0 | 77,0 | - | - | 73,0 | - |
| 66 | 26,6 | 57,5 | 72,0 | - | - | 68,0 | - |
| 70 | 23,9 | 50,5 | 67,0 | 61,5 | - | 63,5 | - |
| 74 | 21,5 | 43,6 | 61,5 | 60,5 | - | 61,0 | - |
| 78 | - | - | 54,5 | 58,5 | - | 59,0 | - |
| 82 | - | - | 47,8 | 55,0 | - | 56,0 | - |
| 84 | - | - | 44,2 | 53,5 | - | 53,7 | - |
| 86 | - | - | - | 51,5 | 49,1 | 51,5 | - |
| 90 | - | - | - | 48,9 | 46,2 | 47,0 | - |
| 92 | - | - | - | 47,4 | 44,8 | 44,9 | - |
| 94 | - | - | - | - | 43,6 | 42,8 | - |
| 98 | - | - | - | - | 41,2 | 38,1 | - |
| 100 | - | - | - | - | 40,1 | 35,8 | - |
| 102 | - | - | - | - | - | 33,5 | - |
| 106 | - | - | - | - | - | 29,1 | - |
| 110 | - | - | - | - | - | 24,7 | - |
| 114 | - | - | - | - | - | 20,1 | - |
| 118 | - | - | - | - | - | - | - |

**Remarks · Bemerkungen · Remarques**

see page 46 · siehe Seite 46 · voir page 46

## 48 m + 84 m

| | SWSL | | | | | SFSL | HSWSL |
|---|---|---|---|---|---|---|---|
| | 0 t | 0 t-250 t | | | | | |
| | 200 t | 160 t | | | | | |
| | 85° | 85° | 75° | 65° | 55° | | 85° |
| m | t | t | t | t | t | t | t |
| 34 | 59,0 | 64,0 | - | - | - | - | - |
| 38 | 58,5 | 64,0 | - | - | - | 64,0 | - |
| 42 | 53,5 | 63,0 | - | - | - | 63,0 | - |
| 46 | 46,6 | 62,0 | - | - | - | 63,0 | - |
| 50 | 40,8 | 61,0 | - | - | - | 63,0 | - |
| 54 | 35,9 | 60,0 | - | - | - | 62,0 | - |
| 56 | 33,8 | 60,0 | 58,0 | - | - | 61,5 | - |
| 58 | 31,8 | 60,0 | 58,0 | - | - | 61,0 | - |
| 62 | 28,2 | 59,0 | 58,0 | - | - | 59,0 | - |
| 66 | 25,1 | 58,0 | 58,0 | - | - | 57,0 | - |
| 70 | 22,3 | 53,5 | 58,0 | - | - | 55,0 | - |
| 74 | 19,9 | 48,0 | 58,0 | - | - | 53,0 | - |
| 76 | 18,8 | 45,3 | 58,0 | 46,1 | - | 51,5 | - |
| 78 | 17,7 | 42,7 | 56,5 | 46,1 | - | 50,0 | - |
| 82 | 15,8 | 37,6 | 51,0 | 46,1 | - | 48,0 | - |
| 86 | 14,1 | 32,4 | 45,9 | 45,7 | - | 44,4 | - |
| 90 | - | - | 40,9 | 44,8 | - | 42,7 | - |
| 94 | - | - | 35,9 | 43,7 | 38,8 | 40,5 | - |
| 96 | - | - | 33,3 | 42,7 | 38,7 | 39,2 | - |
| 98 | - | - | - | 41,8 | 38,6 | 38,0 | - |
| 102 | - | - | - | 38,5 | 37,3 | 35,1 | - |
| 104 | - | - | - | 36,0 | 36,3 | 33,8 | - |
| 106 | - | - | - | - | 35,3 | 32,5 | - |
| 110 | - | - | - | - | 33,5 | 28,6 | - |
| 114 | - | - | - | - | - | 24,9 | - |
| 118 | - | - | - | - | - | 21,2 | - |
| 122 | - | - | - | - | - | 17,6 | - |

## 60 m + 24 m

| m | t | t | t | t | t | t | t |
|---|---|---|---|---|---|---|---|
| 17 | - | - | - | - | - | - | 272,0 |
| 18 | 176,0 | 247,0 | - | - | - | 249,0 | 267,0 |
| 20 | 155,0 | 238,0 | - | - | - | 247,0 | 257,0 |
| 22 | 138,0 | 228,0 | - | - | - | 246,0 | 245,0 |
| 24 | 124,0 | 218,0 | - | - | - | 245,0 | 234,0 |
| 26 | 112,0 | 206,0 | - | - | - | 238,0 | 221,0 |
| 28 | 102,0 | 193,0 | - | - | - | 226,0 | 205,0 |
| 30 | 94,0 | 182,0 | - | - | - | 214,0 | 183,0 |
| 31 | - | - | - | - | - | 208,7 | 165,0 |
| 32 | - | - | 180,0 | - | - | 203,5 | - |
| 34 | - | - | 174,0 | - | - | 193,0 | - |
| 38 | - | - | 154,0 | - | - | 167,0 | - |
| 40 | - | - | 145,0 | - | - | 157,0 | - |
| 42 | - | - | - | - | - | 147,0 | - |
| 44 | - | - | - | 123,0 | - | 139,0 | - |
| 46 | - | - | - | 117,0 | - | 131,0 | - |
| 50 | - | - | - | 106,0 | - | 117,0 | - |
| 54 | - | - | - | - | - | 106,0 | - |
| 56 | - | - | - | - | 89,0 | 101,0 | - |
| 58 | - | - | - | - | 85,5 | 96,0 | - |
| 60 | - | - | - | - | 82,5 | 90,2 | - |
| 62 | - | - | - | - | - | 84,5 | - |
| 66 | - | - | - | - | - | 74,5 | - |
| 70 | - | - | - | - | - | 66,0 | - |
| 74 | - | - | - | - | - | 58,0 | - |
| 78 | - | - | - | - | - | 49,4 | - |
| 82 | - | - | - | - | - | - | - |

autovictor

# SWSL /SFSL15°/ HSWSL LIFTING CAPACITIES · TRAGFÄHIG-KEITEN · CAPACITÉS DE LEVAGE

14 m x 14 m | 11-15 m | 360° | DIN/ISO

## 60 m + 36 m

| | SWSL | | | | | SFSL | HSWSL |
|---|---|---|---|---|---|---|---|
| | 0 t | 0 t-250 t | | | | | |
| | 200 t | 160 t | | | | | |
| | 85° | 85° | 75° | 65° | 55° | | 85° |
| m | t | t | t | t | t | t | t |
| 20 | 152,0 | 180,0 | - | - | - | - | 196,0 |
| 22 | 135,0 | 180,0 | - | - | - | 179,0 | 193,0 |
| 24 | 122,0 | 176,0 | - | - | - | 178,0 | 188,0 |
| 26 | 110,0 | 171,0 | - | - | - | 178,0 | 183,0 |
| 28 | 100,0 | 165,0 | - | - | - | 178,0 | 177,0 |
| 30 | 92,5 | 160,0 | - | - | - | 178,0 | 171,0 |
| 34 | 79,0 | 149,0 | - | - | - | 170,0 | 159,0 |
| 38 | 68,5 | 137,0 | 150,0 | - | - | 163,0 | 137,0 |
| 42 | 60,0 | 109,0 | 135,0 | - | - | 149,0 | 109,0 |
| 46 | - | - | 122,0 | - | - | 132,0 | - |
| 50 | - | - | 111,0 | - | - | 118,0 | - |
| 52 | - | - | 106,0 | 99,5 | - | 112,0 | - |
| 54 | - | - | - | 95,5 | - | 106,0 | - |
| 58 | - | - | - | 87,5 | - | 96,5 | - |
| 62 | - | - | - | 81,0 | - | 88,0 | - |
| 66 | - | - | - | - | 71,0 | 79,5 | - |
| 70 | - | - | - | - | 66,0 | 71,0 | - |
| 72 | - | - | - | - | 64,0 | 67,0 | - |
| 74 | - | - | - | - | - | 63,0 | - |
| 78 | - | - | - | - | - | 56,0 | - |
| 82 | - | - | - | - | - | 50,0 | - |
| 86 | - | - | - | - | - | 43,6 | - |

## 60 m + 48 m

| m | t | t | t | t | t | t | t |
|---|---|---|---|---|---|---|---|
| 24 | 120,0 | 135,0 | - | - | - | - | 145,0 |
| 26 | 108,0 | 135,0 | - | - | - | 135,0 | 144,0 |
| 28 | 98,5 | 135,0 | - | - | - | 135,0 | 141,0 |
| 30 | 90,5 | 132,0 | - | - | - | 135,0 | 138,0 |
| 34 | 77,0 | 126,0 | - | - | - | 135,0 | 131,0 |
| 38 | 66,5 | 119,0 | - | - | - | 132,0 | 123,0 |
| 42 | 58,0 | 113,0 | 119,0 | - | - | 127,0 | 114,0 |
| 46 | 51,0 | 107,0 | 118,0 | - | - | 122,0 | 105,0 |
| 50 | 45,7 | 91,5 | 109,0 | - | - | 113,0 | 91,5 |
| 54 | 40,9 | 75,0 | 100,0 | - | - | 106,0 | 75,0 |
| 58 | - | - | 92,0 | - | - | 97,5 | - |
| 60 | - | - | 88,0 | 82,5 | - | 93,2 | - |
| 62 | - | - | 85,0 | 79,0 | - | 89,0 | - |
| 64 | - | - | 81,5 | 76,0 | - | 85,0 | - |
| 66 | - | - | - | 73,5 | - | 81,0 | - |
| 70 | - | - | - | 68,5 | - | 74,0 | - |
| 74 | - | - | - | 64,0 | 60,0 | 67,0 | - |
| 78 | - | - | - | - | 56,0 | 60,0 | - |
| 82 | - | - | - | - | 52,5 | 53,5 | - |
| 86 | - | - | - | - | - | 48,3 | - |
| 90 | - | - | - | - | - | 43,6 | - |
| 94 | - | - | - | - | - | 38,2 | - |
| 98 | - | - | - | - | - | 32,8 | - |

## 60 m + 60 m

| | SWSL | | | | | SFSL | HSWSL |
|---|---|---|---|---|---|---|---|
| | 0 t | 0 t-250 t | | | | | |
| | 200 t | 160 t | | | | | |
| | 85° | 85° | 75° | 65° | 55° | | 85° |
| m | t | t | t | t | t | t | t |
| 28 | 96,5 | 102,0 | - | - | - | - | 109,0 |
| 30 | 88,0 | 102,0 | - | - | - | 102,0 | 108,0 |
| 34 | 74,5 | 101,0 | - | - | - | 102,0 | 104,0 |
| 38 | 64,0 | 98,0 | - | - | - | 102,0 | 99,0 |
| 42 | 55,5 | 95,0 | - | - | - | 101,0 | 93,0 |
| 46 | 49,1 | 91,0 | - | - | - | 100,0 | 86,5 |
| 48 | 46,2 | 88,5 | 96,0 | - | - | 100,0 | 83,0 |
| 50 | 43,4 | 86,0 | 96,0 | - | - | 100,0 | 80,0 |
| 54 | 38,6 | 82,0 | 94,0 | - | - | 93,0 | 75,0 |
| 58 | 34,5 | 73,0 | 89,0 | - | - | 87,0 | 69,5 |
| 62 | 31,0 | 63,0 | 83,0 | - | - | 81,0 | 63,0 |
| 65 | - | - | 77,5 | - | - | 76,1 | 55,0 |
| 66 | - | - | 76,0 | 70,5 | - | 74,5 | - |
| 70 | - | - | 71,0 | 66,0 | - | 70,0 | - |
| 74 | - | - | 63,0 | 61,5 | - | 66,0 | - |
| 76 | - | - | 58,0 | 59,5 | - | 63,7 | - |
| 78 | - | - | - | 57,5 | - | 61,5 | - |
| 82 | - | - | - | 54,0 | - | 56,0 | - |
| 84 | - | - | - | 52,5 | 48,9 | 53,2 | - |
| 86 | - | - | - | 51,0 | 47,4 | 50,5 | - |
| 90 | - | - | - | - | 44,6 | 45,2 | - |
| 94 | - | - | - | - | 42,1 | 41,1 | - |
| 98 | - | - | - | - | - | 36,8 | - |
| 102 | - | - | - | - | - | 32,3 | - |
| 106 | - | - | - | - | - | 28,0 | - |
| 110 | - | - | - | - | - | 23,6 | - |

## 60 m + 72 m

| m | t | t | t | t | t | t | t |
|---|---|---|---|---|---|---|---|
| 32 | - | - | - | - | - | - | 79,0 |
| 34 | 72,0 | 77,0 | - | - | - | 77,0 | 78,5 |
| 38 | 61,5 | 76,0 | - | - | - | 77,0 | 76,0 |
| 42 | 53,0 | 74,0 | - | - | - | 77,0 | 73,5 |
| 46 | 46,6 | 72,0 | - | - | - | 76,0 | 70,5 |
| 50 | 41,0 | 70,0 | - | - | - | 75,0 | 68,0 |
| 54 | 36,2 | 68,0 | 71,0 | - | - | 74,0 | 65,0 |
| 58 | 32,1 | 66,0 | 71,0 | - | - | 72,0 | 62,0 |
| 62 | 28,6 | 63,0 | 71,0 | - | - | 69,0 | 59,0 |
| 66 | 25,5 | 59,5 | 69,0 | - | - | 65,0 | 56,0 |
| 70 | 22,9 | 52,5 | 64,0 | - | - | 62,0 | 52,5 |
| 74 | 20,5 | 45,9 | 60,0 | 55,5 | - | 58,0 | 45,9 |
| 77 | - | - | 57,0 | 55,0 | - | 56,1 | 40,4 |
| 78 | - | - | 56,0 | 55,0 | - | 55,5 | - |
| 82 | - | - | 52,0 | 52,0 | - | 54,0 | - |
| 86 | - | - | 46,6 | 48,8 | - | 50,5 | - |
| 90 | - | - | - | 45,9 | - | 46,3 | - |
| 92 | - | - | - | 44,6 | 41,0 | 43,9 | - |
| 94 | - | - | - | 43,3 | 39,8 | 41,6 | - |
| 96 | - | - | - | 42,1 | 38,6 | 39,4 | - |
| 98 | - | - | - | - | 37,5 | 37,8 | - |
| 102 | - | - | - | - | 35,4 | 34,1 | - |
| 106 | - | - | - | - | 33,6 | 30,3 | - |
| 110 | - | - | - | - | - | 26,6 | - |
| 114 | - | - | - | - | - | 23,0 | - |
| 118 | - | - | - | - | - | 19,4 | - |
| 122 | - | - | - | - | - | 15,8 | - |

**Remarks · Bemerkungen · Remarques**

Main boom angle 85°, 75°, 65° and 55°; capacities for intermediate boom positions are calculated by the crane control system IC-1

Hauptauslegerwinkel 85°, 75°, 65° und 55°; Traglasten für Zwischenstellungen des Hauptauslegers werden von der Kransteuerung IC-1 berechnet

Jarret de flèche principale 85°, 75°, 65° et 55°; le système de commande de la grue IC-1 calcule les charges pour les positions intermédiaires de la flèche

For HSWSL a boom power-kit is required · Für HSWSL ist ein Ausleger-Verstärkungs-Kit erforderlich · Un kit à fortifier de flèche principale est nécessaire pour HSWSL

# SWSL /SFSL15°/ HSWSL LIFTING CAPACITIES · TRAGFÄHIG-KEITEN · CAPACITÉS DE LEVAGE

14 m x 14 m | 11-15 m | 360° | DIN/ISO

## 60 m + 84 m

| | SWSL | | | | | SFSL | HSWSL |
|---|---|---|---|---|---|---|---|
| | 0 t | 0 t-250 t | | | | | |
| | 200 t | 160 t | | | | | |
| | 85° | 85° | 75° | 65° | 55° | | 85° |
| m | t | t | t | t | t | t | t |
| 35 | - | - | - | - | - | - | 58,0 |
| 38 | 53,5 | 57,0 | - | - | - | 57,0 | 57,5 |
| 42 | 52,0 | 57,0 | - | - | - | 57,0 | 56,5 |
| 46 | 45,2 | 56,0 | - | - | - | 57,0 | 55,5 |
| 50 | 39,5 | 55,0 | - | - | - | 57,0 | 54,5 |
| 54 | 34,7 | 54,0 | - | - | - | 56,0 | 53,0 |
| 58 | 30,6 | 53,0 | - | - | - | 55,0 | 52,0 |
| 60 | 28,8 | 52,5 | 52,0 | - | - | 55,0 | 51,2 |
| 62 | 27,1 | 52,0 | 52,0 | - | - | 55,0 | 50,5 |
| 66 | 24,0 | 51,0 | 52,0 | - | - | 53,0 | 49,4 |
| 70 | 21,3 | 49,0 | 52,0 | - | - | 51,0 | 47,4 |
| 74 | 18,9 | 48,0 | 52,0 | - | - | 50,0 | 45,4 |
| 78 | 16,8 | 44,0 | 52,0 | - | - | 48,0 | 43,4 |
| 82 | 14,9 | 39,2 | 51,0 | 41,6 | - | 46,0 | 39,2 |
| 86 | 13,2 | 34,2 | 48,0 | 41,6 | - | 44,0 | 34,2 |
| 89 | - | - | 45,5 | 41,6 | - | 42,5 | 30,0 |
| 90 | - | - | 45,0 | 41,6 | - | 42,0 | - |
| 94 | - | - | 40,0 | 41,2 | - | 40,0 | - |
| 98 | - | - | 35,1 | 39,4 | - | 38,0 | - |
| 102 | - | - | - | 37,2 | 33,7 | 35,0 | - |
| 106 | - | - | - | 35,2 | 31,8 | 31,9 | - |
| 108 | - | - | - | 34,2 | 30,9 | 30,2 | - |
| 110 | - | - | - | - | 30,1 | 28,5 | - |
| 114 | - | - | - | - | 28,5 | 25,3 | - |
| 118 | - | - | - | - | 27,0 | 22,1 | - |
| 122 | - | - | - | - | - | 19,0 | - |
| 126 | - | - | - | - | - | 16,0 | - |
| 130 | - | - | - | - | - | 13,0 | - |
| 134 | - | - | - | - | - | 9,8 | - |

## 72 m + 24 m

| m | t | t | t | t | t | t | t |
|---|---|---|---|---|---|---|---|
| 18 | 172,0 | 185,0 | - | - | - | - | 217,0 |
| 20 | 151,0 | 185,0 | - | - | - | 186,0 | 214,0 |
| 22 | 135,0 | 175,0 | - | - | - | 184,0 | 205,0 |
| 24 | 121,0 | 168,0 | - | - | - | 184,0 | 197,0 |
| 26 | 110,0 | 162,0 | - | - | - | 184,0 | 188,0 |
| 28 | 100,0 | 157,0 | - | - | - | 182,0 | 181,0 |
| 30 | 92,0 | 152,0 | - | - | - | 176,0 | 173,0 |
| 32 | - | - | - | - | - | 173,0 | 165,0 |
| 34 | - | - | 155,0 | - | - | 170,0 | - |
| 38 | - | - | 150,0 | - | - | 159,0 | - |
| 42 | - | - | 133,0 | - | - | 145,0 | - |
| 44 | - | - | 127,0 | - | - | 136,5 | - |
| 46 | - | - | - | - | - | 128,0 | - |
| 50 | - | - | - | 102,0 | - | 114,0 | - |
| 54 | - | - | - | 93,0 | - | 103,0 | - |
| 56 | - | - | - | 89,5 | - | 98,0 | - |
| 58 | - | - | - | - | - | 93,0 | - |
| 62 | - | - | - | - | - | 83,5 | - |
| 66 | - | - | - | - | - | 74,5 | - |
| 70 | - | - | - | - | - | 66,5 | - |
| 74 | - | - | - | - | - | 59,0 | - |
| 78 | - | - | - | - | - | 52,5 | - |
| 82 | - | - | - | - | - | 46,6 | - |
| 86 | - | - | - | - | - | 40,1 | - |
| 90 | - | - | - | - | - | - | - |

## 72 m + 36 m

| | SWSL | | | | | SFSL | HSWSL |
|---|---|---|---|---|---|---|---|
| | 0 t | 0 t-250 t | | | | | |
| | 200 t | 160 t | | | | | |
| | 85° | 85° | 75° | 65° | 55° | | 85° |
| m | t | t | t | t | t | t | t |
| 22 | 133,0 | 139,0 | - | - | - | - | 163,0 |
| 24 | 119,0 | 136,0 | - | - | - | 138,0 | 159,0 |
| 26 | 108,0 | 134,0 | - | - | - | 138,0 | 154,0 |
| 28 | 98,5 | 130,0 | - | - | - | 138,0 | 150,0 |
| 30 | 90,5 | 126,0 | - | - | - | 138,0 | 145,0 |
| 34 | 77,0 | 119,0 | - | - | - | 136,0 | 136,0 |
| 38 | 66,5 | 112,0 | - | - | - | 132,0 | 127,0 |
| 40 | 62,5 | 109,5 | 125,0 | - | - | 129,5 | 123,0 |
| 42 | 58,5 | 107,0 | 125,0 | - | - | 127,0 | 117,0 |
| 43 | - | - | 123,5 | - | - | 124,7 | 110,0 |
| 46 | - | - | 118,0 | - | - | 118,0 | - |
| 50 | - | - | 108,0 | - | - | 110,0 | - |
| 54 | - | - | 98,5 | - | - | 102,0 | - |
| 56 | - | - | 94,5 | - | - | 98,0 | - |
| 58 | - | - | - | 83,5 | - | 94,0 | - |
| 62 | - | - | - | 77,0 | - | 85,0 | - |
| 66 | - | - | - | 71,5 | - | 76,5 | - |
| 68 | - | - | - | 69,0 | - | 72,7 | - |
| 70 | - | - | - | - | - | 69,0 | - |
| 72 | - | - | - | - | 59,0 | 65,5 | - |
| 74 | - | - | - | - | 57,0 | 62,0 | - |
| 78 | - | - | - | - | 53,5 | 55,5 | - |
| 82 | - | - | - | - | - | 49,5 | - |
| 86 | - | - | - | - | - | 44,6 | - |
| 90 | - | - | - | - | - | 39,5 | - |
| 94 | - | - | - | - | - | 34,3 | - |
| 98 | - | - | - | - | - | 29,0 | - |

## 72 m + 48 m

| m | t | t | t | t | t | t | t |
|---|---|---|---|---|---|---|---|
| 25 | - | - | - | - | - | - | 123,0 |
| 26 | 104,0 | 106,0 | - | - | - | - | 123,0 |
| 28 | 96,5 | 106,0 | - | - | - | 106,0 | 120,0 |
| 30 | 88,0 | 105,0 | - | - | - | 106,0 | 118,0 |
| 34 | 75,0 | 101,0 | - | - | - | 106,0 | 113,0 |
| 38 | 64,5 | 97,0 | - | - | - | 106,0 | 107,0 |
| 42 | 56,5 | 92,0 | - | - | - | 106,0 | 102,0 |
| 46 | 49,9 | 88,0 | 103,0 | - | - | 106,0 | 96,5 |
| 50 | 44,3 | 84,0 | 101,0 | - | - | 101,0 | 91,0 |
| 54 | 39,6 | 80,0 | 94,0 | - | - | 94,0 | 80,0 |
| 55 | - | - | 92,5 | - | - | 92,2 | 75,5 |
| 58 | - | - | 88,0 | - | - | 87,0 | - |
| 62 | - | - | 82,0 | - | - | 80,5 | - |
| 64 | - | - | 79,0 | 72,0 | - | 78,2 | - |
| 66 | - | - | 76,5 | 69,5 | - | 76,0 | - |
| 70 | - | - | - | 64,5 | - | 70,5 | - |
| 74 | - | - | - | 60,5 | - | 63,5 | - |
| 78 | - | - | - | 56,5 | - | 58,0 | - |
| 82 | - | - | - | - | 48,5 | 52,0 | - |
| 86 | - | - | - | - | 45,6 | 46,9 | - |
| 90 | - | - | - | - | 43,0 | 41,9 | - |
| 94 | - | - | - | - | - | 38,0 | - |
| 98 | - | - | - | - | - | 33,6 | - |
| 102 | - | - | - | - | - | 29,3 | - |
| 106 | - | - | - | - | - | 25,1 | - |
| 110 | - | - | - | - | - | 20,8 | - |
| 114 | - | - | - | - | - | - | - |

**Remarks · Bemerkungen · Remarques:** see page 48 · siehe Seite 48 · voir page 48

# SWSL /SFSL15°/ HSWSL

LIFTING CAPACITIES · TRAGFÄHIG-KEITEN · CAPACITÉS DE LEVAGE

14 m x 14 m | 11-15 m | 360° | DIN/ISO

72 m + 60 m

| | SWSL | | | | | SFSL | HSWSL |
|---|---|---|---|---|---|---|---|
| | 0 t | 0 t-250 t | | | | | |
| | 200 t | 160 t | | | | | |
| | 85° | 85° | 75° | 65° | 55° | | 85° |
| m | t | t | t | t | t | t | t |
| 29 | - | - | - | - | - | - | 93,5 |
| 30 | 79,5 | 82,0 | - | - | - | - | 93,5 |
| 34 | 72,5 | 81,0 | - | - | - | 82,0 | 90,5 |
| 38 | 62,5 | 79,0 | - | - | - | 82,0 | 87,5 |
| 42 | 54,0 | 76,0 | - | - | - | 82,0 | 84,0 |
| 46 | 47,5 | 73,0 | - | - | - | 82,0 | 80,0 |
| 50 | 42,0 | 71,0 | - | - | - | 82,0 | 76,0 |
| 52 | 39,6 | 70,0 | 79,0 | - | - | 81,5 | 74,0 |
| 54 | 37,3 | 69,0 | 79,0 | - | - | 81,0 | 72,0 |
| 58 | 33,2 | 66,0 | 79,0 | - | - | 77,0 | 67,5 |
| 62 | 29,8 | 64,0 | 77,0 | - | - | 72,0 | 63,5 |
| 66 | 26,8 | 55,5 | 74,0 | - | - | 68,0 | 55,5 |
| 67 | - | - | 72,5 | - | - | 66,8 | 52,5 |
| 70 | - | - | 69,0 | - | - | 63,5 | - |
| 72 | - | - | 66,0 | 60,0 | - | 62,0 | - |
| 74 | - | - | 64,0 | 58,0 | - | 60,5 | - |
| 78 | - | - | 60,0 | 54,0 | - | 58,0 | - |
| 82 | - | - | - | 50,5 | - | 52,5 | - |
| 86 | - | - | - | 47,8 | - | 47,6 | - |
| 90 | - | - | - | 45,0 | 40,5 | 43,2 | - |
| 94 | - | - | - | - | 38,1 | 38,8 | - |
| 98 | - | - | - | - | 36,0 | 35,0 | - |
| 102 | - | - | - | - | 34,0 | 31,2 | - |
| 106 | - | - | - | - | - | 27,5 | - |
| 110 | - | - | - | - | - | 24,0 | - |
| 114 | - | - | - | - | - | 20,5 | - |
| 118 | - | - | - | - | - | 16,9 | - |
| 122 | - | - | - | - | - | 13,4 | - |
| 126 | - | - | - | - | - | - | - |
| 130 | - | - | - | - | - | - | - |
| 134 | - | - | - | - | - | - | - |

72 m + 72 m

| | SWSL | | | | | SFSL | HSWSL |
|---|---|---|---|---|---|---|---|
| | 0 t | 0 t-250 t | | | | | |
| | 200 t | 160 t | | | | | |
| | 85° | 85° | 75° | 65° | 55° | | 85° |
| m | t | t | t | t | t | t | t |
| 33 | - | - | - | - | - | - | 70,0 |
| 34 | 60,0 | 62,0 | - | - | - | - | 70,0 |
| 38 | 59,0 | 62,0 | - | - | - | 63,0 | 68,5 |
| 42 | 51,5 | 61,0 | - | - | - | 63,0 | 66,5 |
| 46 | 45,0 | 60,0 | - | - | - | 63,0 | 64,0 |
| 50 | 39,5 | 58,0 | - | - | - | 63,0 | 62,0 |
| 54 | 34,8 | 56,0 | - | - | - | 63,0 | 59,5 |
| 58 | 30,8 | 54,0 | 60,0 | - | - | 61,0 | 57,0 |
| 62 | 27,3 | 53,0 | 60,0 | - | - | 59,0 | 55,0 |
| 66 | 24,3 | 51,0 | 60,0 | - | - | 56,0 | 52,5 |
| 70 | 21,7 | 48,0 | 59,0 | - | - | 54,0 | 50,5 |
| 74 | 19,4 | 45,0 | 59,0 | - | - | 52,0 | 47,8 |
| 78 | 17,4 | 40,6 | 58,0 | - | - | 49,6 | 40,6 |
| 80 | - | - | 56,0 | 47,4 | - | 48,9 | - |
| 82 | - | - | 54,0 | 47,4 | - | 48,3 | - |
| 86 | - | - | 51,0 | 45,5 | - | 46,9 | - |
| 90 | - | - | 45,0 | 42,7 | - | 42,7 | - |
| 94 | - | - | - | 40,2 | - | 38,5 | - |
| 98 | - | - | - | 37,9 | - | 35,0 | - |
| 100 | - | - | - | 36,9 | 32,0 | 33,1 | - |
| 102 | - | - | - | 35,9 | 31,1 | 31,4 | - |
| 106 | - | - | - | - | 29,3 | 28,1 | - |
| 110 | - | - | - | - | 27,8 | 24,8 | - |
| 112 | - | - | - | - | 27,0 | 23,2 | - |
| 114 | - | - | - | - | - | 21,7 | - |
| 118 | - | - | - | - | - | 18,7 | - |
| 122 | - | - | - | - | - | 15,8 | - |
| 126 | - | - | - | - | - | 12,9 | - |
| 130 | - | - | - | - | - | 9,9 | - |
| 134 | - | - | - | - | - | 6,9 | - |
| 138 | - | - | - | - | - | - | - |

**Remarks · Bemerkungen · Remarques**

Main boom angle 85°, 75°, 65° and 55°; capacities for intermediate boom positions are calculated by the crane control system IC-1
Hauptauslegerwinkel 85°, 75°, 65° und 55°; Traglasten für Zwischenstellungen des Hauptauslegers werden von der Kransteuerung IC-1 berechnet
Jarret de flèche principale 85°, 75°, 65° et 55°; le système de commande de la grue IC-1 calcule les charges pour les positions intermédiaires de la flèche

For HSWSL a boom power-kit is required
Für HSWSL ist ein Ausleger-Verstärkungs-Kit erforderlich
Un kit à fortifier de flèche principale est nécessaire pour HSWSL

# SWSL /SFSL15°/ HSWSL

LIFTING CAPACITIES · TRAGFÄHIG-KEITEN · CAPACITÉS DE LEVAGE

14 m x 14 m | 11-15 m | 360° | DIN/ISO

72 m + 84 m

| | SWSL | | | | | SFSL | HSWSL |
|---|---|---|---|---|---|---|---|
| | 0 t | 0 t-250 t | | | | | |
| | 200 t | 160 t | | | | | |
| | 85° | 85° | 75° | 65° | 55° | | 85° |
| m | t | t | t | t | t | t | t |
| 36 | - | - | - | - | - | - | 52,5 |
| 38 | 45,5 | 47,0 | - | - | - | - | 52,5 |
| 42 | 44,9 | 47,0 | - | - | - | 48,0 | 51,0 |
| 46 | 43,6 | 47,0 | - | - | - | 48,0 | 50,5 |
| 50 | 38,0 | 46,0 | - | - | - | 48,0 | 49,4 |
| 54 | 33,3 | 46,0 | - | - | - | 48,0 | 48,2 |
| 58 | 29,3 | 45,0 | - | - | - | 48,0 | 47,0 |
| 62 | 25,9 | 44,0 | 45,0 | - | - | 47,0 | 45,8 |
| 66 | 22,8 | 43,0 | 45,0 | - | - | 46,0 | 44,6 |
| 70 | 20,2 | 42,0 | 45,0 | - | - | 45,0 | 43,3 |
| 74 | 17,8 | 40,0 | 45,0 | - | - | 44,0 | 41,9 |
| 78 | 15,7 | 39,0 | 44,0 | - | - | 42,0 | 40,5 |
| 82 | 13,9 | 38,0 | 43,0 | - | - | 41,0 | 39,2 |
| 86 | 12,2 | 35,0 | 42,0 | 34,9 | - | 38,0 | 35,6 |
| 90 | 10,8 | 30,2 | 42,0 | 34,9 | - | 36,0 | 30,2 |
| 94 | - | - | 40,0 | 34,8 | - | 34,8 | - |
| 98 | - | - | 38,0 | 34,7 | - | 33,8 | - |
| 102 | - | - | 33,9 | 34,3 | - | 31,5 | - |
| 106 | - | - | - | 32,3 | - | 28,7 | - |
| 108 | - | - | - | 31,4 | 26,3 | 27,2 | - |
| 110 | - | - | - | 30,6 | 25,5 | 25,7 | - |
| 114 | - | - | - | 28,9 | 24,0 | 22,8 | - |
| 118 | - | - | - | - | 22,7 | 20,0 | - |
| 122 | - | - | - | - | 21,4 | 17,3 | - |
| 124 | - | - | - | - | 20,7 | 16,0 | - |
| 126 | - | - | - | - | - | 14,7 | - |
| 130 | - | - | - | - | - | 12,2 | - |
| 134 | - | - | - | - | - | 9,7 | - |
| 138 | - | - | - | - | - | 7,2 | - |
| 142 | - | - | - | - | - | 4,6 | - |
| 146 | - | - | - | - | - | - | - |

84 m + 36 m

| | SWSL | | | | | SFSL | HSWSL |
|---|---|---|---|---|---|---|---|
| | 0 t | 0 t-250 t | | | | | |
| | 200 t | 160 t | | | | | |
| | 85° | 85° | 75° | 65° | 55° | | 85° |
| m | t | t | t | t | t | t | t |
| 23 | - | - | - | - | - | - | 129,0 |
| 24 | 103,0 | 104,0 | - | - | - | 105,0 | 129,0 |
| 26 | 101,0 | 101,0 | - | - | - | 105,0 | 125,0 |
| 28 | 96,0 | 99,0 | - | - | - | 104,0 | 122,0 |
| 30 | 88,0 | 96,0 | - | - | - | 104,0 | 118,0 |
| 34 | 74,5 | 91,0 | - | - | - | 104,0 | 111,0 |
| 38 | 64,5 | 87,0 | - | - | - | 103,0 | 105,0 |
| 42 | 56,5 | 83,0 | - | - | - | 102,0 | 99,0 |
| 44 | - | - | 100,0 | - | - | 100,5 | 96,0 |
| 46 | - | - | 100,0 | - | - | 99,0 | - |
| 50 | - | - | 95,0 | - | - | 92,0 | - |
| 54 | - | - | 90,0 | - | - | 86,0 | - |
| 58 | - | - | 86,0 | - | - | 81,5 | - |
| 62 | - | - | - | 72,5 | - | 77,5 | - |
| 66 | - | - | - | 67,0 | - | 71,0 | - |
| 70 | - | - | - | 62,5 | - | 64,0 | - |
| 72 | - | - | - | 60,0 | - | 60,7 | - |
| 74 | - | - | - | - | - | 57,5 | - |
| 78 | - | - | - | - | - | 52,0 | - |
| 80 | - | - | - | - | 47,2 | 49,4 | - |
| 82 | - | - | - | - | 45,7 | 46,8 | - |
| 84 | - | - | - | - | 44,3 | 44,2 | - |
| 86 | - | - | - | - | - | 41,8 | - |
| 90 | - | - | - | - | - | 37,3 | - |
| 94 | - | - | - | - | - | 32,9 | - |
| 98 | - | - | - | - | - | 28,7 | - |
| 102 | - | - | - | - | - | 24,6 | - |
| 106 | - | - | - | - | - | 20,5 | - |
| 110 | - | - | - | - | - | 16,4 | - |
| 114 | - | - | - | - | - | - | - |
| 118 | - | - | - | - | - | - | - |

**Remarks · Bemerkungen · Remarques**

Main boom angle 85°, 75°, 65° and 55°; capacities for intermediate boom positions are calculated by the crane control system IC-1
Hauptauslegerwinkel 85°, 75°, 65° und 55°; Traglasten für Zwischenstellungen des Hauptauslegers werden von der Kransteuerung IC-1 berechnet
Jarret de flèche principale 85°, 75°, 65° et 55°; le système de commande de la grue IC-1 calcule les charges pour les positions intermédiaires de la flèche

For HSWSL a boom power-kit is required
Für HSWSL ist ein Ausleger-Verstärkungs-Kit erforderlich
Un kit à fortifier de flèche principale est nécessaire pour HSWSL

autovictor

# SWSL /SFSL15°/ HSWSL

**LIFTING CAPACITIES · TRAGFÄHIG-KEITEN · CAPACITÉS DE LEVAGE**

14 m x 14 m | 11-15 m | 360° | DIN/ISO

84 m + 48 m

| | SWSL | | | | | SFSL | HSWSL |
|---|---|---|---|---|---|---|---|
| | 0 t | 0 t-250 t | | | | | |
| | 200 t | 160 t | | | | | |
| | 85° | 85° | 75° | 65° | 55° | | 85° |
| m | t | t | t | t | t | t | t |
| 26 | 79,5 | 80,0 | - | - | - | - | 100,0 |
| 28 | 79,5 | 80,0 | - | - | - | 81,0 | 99,5 |
| 30 | 78,0 | 79,0 | - | - | - | 81,0 | 97,5 |
| 34 | 72,5 | 76,0 | - | - | - | 81,0 | 93,0 |
| 38 | 62,5 | 72,0 | - | - | - | 81,0 | 88,5 |
| 42 | 54,5 | 69,0 | - | - | - | 80,0 | 84,5 |
| 46 | 48,1 | 66,0 | - | - | - | 79,0 | 80,5 |
| 48 | 45,4 | 65,0 | 78,0 | - | - | 79,0 | 78,5 |
| 50 | 42,7 | 64,0 | 78,0 | - | - | 79,0 | 76,5 |
| 54 | 38,0 | 61,0 | 77,0 | - | - | 75,0 | 72,5 |
| 56 | - | - | 76,0 | - | - | 73,0 | 71,0 |
| 58 | - | - | 74,0 | - | - | 71,0 | - |
| 62 | - | - | 72,0 | - | - | 67,0 | - |
| 66 | - | - | 68,0 | - | - | 63,5 | - |
| 70 | - | - | 65,0 | 60,0 | - | 61,5 | - |
| 74 | - | - | - | 56,0 | - | 58,5 | - |
| 78 | - | - | - | 52,5 | - | 53,0 | - |
| 82 | - | - | - | 49,5 | - | 47,8 | - |
| 84 | - | - | - | 48,0 | - | 45,6 | - |
| 86 | - | - | - | - | - | 43,4 | - |
| 88 | - | - | - | - | 39,3 | 41,1 | - |
| 90 | - | - | - | - | 38,1 | 38,9 | - |
| 94 | - | - | - | - | 36,0 | 34,6 | - |
| 96 | - | - | - | - | 35,0 | 32,7 | - |
| 98 | - | - | - | - | - | 30,8 | - |
| 102 | - | - | - | - | - | 27,2 | - |
| 106 | - | - | - | - | - | 23,7 | - |
| 110 | - | - | - | - | - | 20,2 | - |
| 114 | - | - | - | - | - | 16,9 | - |
| 118 | - | - | - | - | - | 13,5 | - |
| 122 | - | - | - | - | - | 10,0 | - |

84 m + 60 m

| | SWSL | | | | | SFSL | HSWSL |
|---|---|---|---|---|---|---|---|
| | 0 t | 0 t-250 t | | | | | |
| | 200 t | 160 t | | | | | |
| | 85° | 85° | 75° | 65° | 55° | | 85° |
| m | t | t | t | t | t | t | t |
| 30 | 61,0 | 64,0 | - | - | - | - | 77,0 |
| 34 | 60,0 | 64,0 | - | - | - | 62,0 | 75,0 |
| 38 | 58,0 | 62,0 | - | - | - | 62,0 | 72,5 |
| 42 | 52,0 | 59,0 | - | - | - | 62,0 | 70,0 |
| 46 | 45,8 | 57,0 | - | - | - | 62,0 | 67,0 |
| 50 | 40,3 | 55,0 | - | - | - | 62,0 | 64,5 |
| 54 | 35,7 | 52,0 | 60,0 | - | - | 62,0 | 61,5 |
| 58 | 31,8 | 50,0 | 60,0 | - | - | 61,0 | 59,0 |
| 62 | 28,4 | 48,0 | 59,0 | - | - | 58,0 | 56,5 |
| 66 | 25,4 | 46,0 | 58,0 | - | - | 56,0 | 54,0 |
| 68 | - | - | 57,0 | - | - | 54,5 | 52,5 |
| 70 | - | - | 56,0 | - | - | 53,0 | - |
| 74 | - | - | 54,0 | - | - | 51,0 | - |
| 78 | - | - | 52,0 | 46,3 | - | 48,0 | - |
| 82 | - | - | 49,0 | 45,6 | - | 46,0 | - |
| 86 | - | - | - | 43,9 | - | 43,1 | - |
| 90 | - | - | - | 41,6 | - | 38,8 | - |
| 94 | - | - | - | 39,2 | - | 35,2 | - |
| 96 | - | - | - | 38,1 | - | 33,2 | - |
| 98 | - | - | - | - | 30,9 | 31,3 | - |
| 102 | - | - | - | - | 29,1 | 27,7 | - |
| 106 | - | - | - | - | 27,5 | 24,4 | - |
| 108 | - | - | - | - | 26,8 | 22,8 | - |
| 110 | - | - | - | - | - | 21,3 | - |
| 114 | - | - | - | - | - | 18,3 | - |
| 118 | - | - | - | - | - | 15,4 | - |
| 122 | - | - | - | - | - | 12,6 | - |
| 126 | - | - | - | - | - | 9,7 | - |
| 130 | - | - | - | - | - | 6,8 | - |
| 134 | - | - | - | - | - | - | - |
| 138 | - | - | - | - | - | - | - |

**Remarks · Bemerkungen · Remarques**

Main boom angle 85°, 75°, 65° and 55°; capacities for intermediate boom positions are calculated by the crane control system IC-1
Hauptauslegerwinkel 85°, 75°, 65° und 55°; Traglasten für Zwischenstellungen des Hauptauslegers werden von der Kransteuerung IC-1 berechnet
Jarret de flèche principale 85°, 75°, 65° et 55°; le système de commande de la grue IC-1 calcule les charges pour les positions intermédiaires de la flèche

For HSWSL a boom power-kit is required
Für HSWSL ist ein Ausleger-Verstärkungs-Kit erforderlich
Un kit à fortifier de flèche principale est nécessaire pour HSWSL

# SWSL /SFSL15°/ HSWSL

LIFTING CAPACITIES · TRAGFÄHIG-KEITEN · CAPACITÉS DE LEVAGE

14 m x 14 m | 11-15 m | 360° | DIN/ISO

84 m + 72 m

| | SWSL | | | | | SFSL | HSWSL |
|---|---|---|---|---|---|---|---|
| | 0 t | 0 t-250 t | | | | | |
| | 200 t | 160 t | | | | | |
| | 85° | 85° | 75° | 65° | 55° | | 85° |
| m | t | t | t | t | t | t | t |
| 34 | 47,2 | 49,0 | - | - | - | - | 58,5 |
| 38 | 46,5 | 49,0 | - | - | - | 48,0 | 57,5 |
| 42 | 45,1 | 48,0 | - | - | - | 48,0 | 55,5 |
| 46 | 43,2 | 47,0 | - | - | - | 48,0 | 54,0 |
| 50 | 37,8 | 45,0 | - | - | - | 48,0 | 52,5 |
| 54 | 33,2 | 44,0 | - | - | - | 48,0 | 50,5 |
| 58 | 29,3 | 42,0 | - | - | - | 48,0 | 49,0 |
| 60 | 27,6 | 41,5 | 47,0 | - | - | 48,0 | 48,1 |
| 62 | 25,9 | 41,0 | 47,0 | - | - | 48,0 | 47,2 |
| 66 | 23,0 | 39,0 | 46,0 | - | - | 46,0 | 45,5 |
| 70 | 20,4 | 38,0 | 46,0 | - | - | 45,0 | 43,7 |
| 74 | 18,1 | 37,0 | 45,0 | - | - | 44,0 | 42,0 |
| 78 | 16,1 | 36,0 | 44,0 | - | - | 42,0 | 40,3 |
| 79 | - | - | 43,5 | - | - | 41,2 | 39,8 |
| 82 | - | - | 43,0 | - | - | 39,0 | - |
| 84 | - | - | 42,0 | 35,3 | - | 37,4 | - |
| 86 | - | - | 41,0 | 35,2 | - | 36,0 | - |
| 90 | - | - | 40,0 | 35,0 | - | 35,0 | - |
| 94 | - | - | 39,0 | 34,1 | - | 33,1 | - |
| 98 | - | - | - | 33,0 | - | 30,1 | - |
| 102 | - | - | - | 31,6 | - | 27,1 | - |
| 106 | - | - | - | 30,1 | 24,3 | 24,3 | - |
| 110 | - | - | - | - | 22,8 | 21,3 | - |
| 114 | - | - | - | - | 21,5 | 18,4 | - |
| 118 | - | - | - | - | 20,1 | 15,8 | - |
| 120 | - | - | - | - | 19,4 | 14,5 | - |
| 122 | - | - | - | - | - | 13,2 | - |
| 126 | - | - | - | - | - | 10,7 | - |
| 130 | - | - | - | - | - | 8,3 | - |
| 134 | - | - | - | - | - | 5,9 | - |
| 138 | - | - | - | - | - | - | - |
| 142 | - | - | - | - | - | - | - |
| 146 | - | - | - | - | - | - | - |

84 m + 84 m

| | SWSL | | | | | SFSL | HSWSL |
|---|---|---|---|---|---|---|---|
| | 0 t | 0 t-250 t | | | | | |
| | 200 t | 160 t | | | | | |
| | 85° | 85° | 75° | 65° | 55° | | 85° |
| m | t | t | t | t | t | t | t |
| 37 | - | - | - | - | - | - | 44,5 |
| 38 | 36,2 | 40,0 | - | - | - | - | 44,5 |
| 42 | 35,8 | 40,0 | - | - | - | 38,0 | 43,8 |
| 46 | 34,9 | 39,0 | - | - | - | 38,0 | 42,9 |
| 50 | 33,9 | 38,0 | - | - | - | 38,0 | 41,9 |
| 54 | 31,8 | 37,0 | - | - | - | 38,0 | 40,8 |
| 58 | 27,8 | 36,0 | - | - | - | 38,0 | 39,6 |
| 62 | 24,5 | 35,0 | - | - | - | 38,0 | 38,5 |
| 66 | 21,5 | 34,0 | 37,0 | - | - | 38,0 | 37,3 |
| 70 | 18,9 | 33,0 | 37,0 | - | - | 37,0 | 36,1 |
| 74 | 16,6 | 32,0 | 37,0 | - | - | 37,0 | 34,9 |
| 78 | 14,6 | 31,0 | 37,0 | - | - | 36,0 | 33,7 |
| 82 | 12,7 | 29,0 | 36,0 | - | - | 35,0 | 32,5 |
| 86 | 11,1 | 28,0 | 34,0 | - | - | 34,0 | 31,3 |
| 90 | 9,7 | 27,0 | 33,0 | - | - | 32,0 | 30,2 |
| 91 | - | - | 32,5 | - | - | 31,0 | 29,9 |
| 92 | - | - | 32,0 | 26,3 | - | 30,5 | - |
| 94 | - | - | 32,0 | 26,3 | - | 30,0 | - |
| 98 | - | - | 30,0 | 26,3 | - | 29,0 | - |
| 102 | - | - | 28,0 | 26,0 | - | 26,0 | - |
| 104 | - | - | 24,7 | 25,7 | - | 24,9 | - |
| 106 | - | - | - | 25,4 | - | 24,0 | - |
| 110 | - | - | - | 24,7 | - | 21,6 | - |
| 114 | - | - | - | 23,7 | - | 19,2 | - |
| 116 | - | - | - | 23,2 | 18,5 | 17,8 | - |
| 118 | - | - | - | 22,7 | 17,8 | 16,5 | - |
| 122 | - | - | - | - | 16,4 | 13,9 | - |
| 126 | - | - | - | - | 15,2 | 11,6 | - |
| 130 | - | - | - | - | 14,0 | 9,4 | - |
| 132 | - | - | - | - | 13,5 | 8,3 | - |
| 134 | - | - | - | - | - | 7,2 | - |
| 138 | - | - | - | - | - | 5,0 | - |
| 142 | - | - | - | - | - | - | - |

**Remarks · Bemerkungen · Remarques**

Main boom angle 85°, 75°, 65° and 55°; capacities for intermediate boom positions are calculated by the crane control system IC-1
Hauptauslegerwinkel 85°, 75°, 65° und 55°; Traglasten für Zwischenstellungen des Hauptauslegers werden von der Kransteuerung IC-1 berechnet
Jarret de flèche principale 85°, 75°, 65° et 55°; le système de commande de la grue IC-1 calcule les charges pour les positions intermédiaires de la flèche

For HSWSL a boom power-kit is required
Für HSWSL ist ein Ausleger-Verstärkungs-Kit erforderlich
Un kit à fortifier de flèche principale est nécessaire pour HSWSL

# SWSL /SFSL15°/ HSWSL

LIFTING CAPACITIES · TRAGFÄHIG-KEITEN · CAPACITÉS DE LEVAGE

14 m x 14 m | 11-15 m | 360° | DIN/ISO

96 m + 36 m

| | SWSL | | | | | SFSL | HSWSL |
|---|---|---|---|---|---|---|---|
| | 0 t | 0 t-250 t | | | | | |
| | 200 t | 160 t | | | | | |
| | 85° | 85° | 75° | 65° | 55° | | 85° |
| m | t | t | t | t | t | t | t |
| 24 | 78,0 | 80,0 | - | - | - | - | 99,5 |
| 26 | 77,0 | 80,0 | - | - | - | 80,0 | 98,0 |
| 28 | 75,0 | 76,5 | - | - | - | 79,5 | 95,5 |
| 30 | 72,5 | 74,0 | - | - | - | 78,5 | 92,5 |
| 34 | 68,0 | 69,5 | - | - | - | 76,5 | 87,0 |
| 38 | 62,5 | 65,0 | - | - | - | 74,5 | 81,5 |
| 42 | 54,5 | 61,5 | - | - | - | 72,0 | 76,5 |
| 45 | - | - | - | - | - | 70,1 | 73,0 |
| 46 | - | - | 67,5 | - | - | 69,5 | - |
| 50 | - | - | 65,5 | - | - | 66,5 | - |
| 54 | - | - | 62,0 | - | - | 64,0 | - |
| 58 | - | - | 59,0 | - | - | 62,0 | - |
| 62 | - | - | 55,0 | - | - | 60,0 | - |
| 66 | - | - | - | - | - | 58,0 | - |
| 68 | - | - | - | 52,5 | - | 57,0 | - |
| 70 | - | - | - | 51,5 | - | 56,0 | - |
| 74 | - | - | - | 48,0 | - | 52,0 | - |
| 78 | - | - | - | 44,3 | - | 46,8 | - |
| 82 | - | - | - | - | - | 41,8 | - |
| 86 | - | - | - | - | 37,1 | 37,6 | - |
| 90 | - | - | - | - | 34,9 | 33,2 | - |
| 92 | - | - | - | - | 34,0 | 31,1 | - |
| 94 | - | - | - | - | - | 29,1 | - |
| 98 | - | - | - | - | - | 25,3 | - |
| 102 | - | - | - | - | - | 21,8 | - |
| 106 | - | - | - | - | - | 18,4 | - |
| 110 | - | - | - | - | - | 15,1 | - |
| 114 | - | - | - | - | - | 11,9 | - |
| 118 | - | - | - | - | - | 8,6 | - |
| 122 | - | - | - | - | - | - | - |
| 126 | - | - | - | - | - | - | - |
| 130 | - | - | - | - | - | - | - |
| 134 | - | - | - | - | - | - | - |

96 m + 48 m

| | SWSL | | | | | SFSL | HSWSL |
|---|---|---|---|---|---|---|---|
| | 0 t | 0 t-250 t | | | | | |
| | 200 t | 160 t | | | | | |
| | 85° | 85° | 75° | 65° | 55° | | 85° |
| m | t | t | t | t | t | t | t |
| 27 | - | - | - | - | - | - | 76,5 |
| 28 | 60,0 | 60,5 | - | - | - | - | 76,5 |
| 30 | 60,0 | 60,5 | - | - | - | 61,5 | 75,5 |
| 34 | 56,5 | 57,0 | - | - | - | 60,0 | 72,0 |
| 38 | 53,5 | 54,0 | - | - | - | 58,5 | 68,5 |
| 42 | 50,0 | 51,0 | - | - | - | 57,5 | 65,0 |
| 46 | 46,2 | 48,6 | - | - | - | 55,5 | 61,5 |
| 50 | 40,8 | 46,2 | - | - | - | 53,5 | 58,5 |
| 52 | 38,5 | 45,0 | 52,0 | - | - | 52,7 | 56,7 |
| 54 | 36,3 | 43,8 | 52,0 | - | - | 52,0 | 55,0 |
| 57 | - | - | 50,5 | - | - | 50,5 | 53,0 |
| 58 | - | - | 50,0 | - | - | 50,0 | - |
| 62 | - | - | 48,0 | - | - | 49,0 | - |
| 66 | - | - | 46,0 | - | - | 47,0 | - |
| 70 | - | - | 43,0 | - | - | 46,0 | - |
| 74 | - | - | 41,0 | 39,9 | - | 44,0 | - |
| 78 | - | - | - | 39,3 | - | 43,0 | - |
| 82 | - | - | - | 36,9 | - | 41,0 | - |
| 86 | - | - | - | 34,5 | - | 37,0 | - |
| 88 | - | - | - | 33,3 | - | 35,4 | - |
| 90 | - | - | - | - | - | 33,9 | - |
| 94 | - | - | - | - | - | 30,2 | - |
| 96 | - | - | - | - | 28,8 | 28,5 | - |
| 98 | - | - | - | - | 28,4 | 26,8 | - |
| 102 | - | - | - | - | 26,4 | 23,3 | - |
| 104 | - | - | - | - | 25,4 | 21,6 | - |
| 106 | - | - | - | - | - | 20,0 | - |
| 110 | - | - | - | - | - | 17,0 | - |
| 114 | - | - | - | - | - | 14,2 | - |
| 118 | - | - | - | - | - | 11,4 | - |
| 122 | - | - | - | - | - | 8,6 | - |
| 126 | - | - | - | - | - | 5,8 | - |
| 130 | - | - | - | - | - | - | - |

**Remarks · Bemerkungen · Remarques**

Main boom angle 85°, 75°, 65° and 55°; capacities for intermediate boom positions are calculated by the crane control system IC-1
Hauptauslegerwinkel 85°, 75°, 65° und 55°; Traglasten für Zwischenstellungen des Hauptauslegers werden von der Kransteuerung IC-1 berechnet
Jarret de flèche principale 85°, 75°, 65° et 55°; le système de commande de la grue IC-1 calcule les charges pour les positions intermédiaires de la flèche

For HSWSL a boom power-kit is required
Für HSWSL ist ein Ausleger-Verstärkungs-Kit erforderlich
Un kit à fortifier de flèche principale est nécessaire pour HSWSL

# SWSL /SFSL15°/ HSWSL

LIFTING CAPACITIES · TRAGFÄHIG-KEITEN · CAPACITÉS DE LEVAGE

14 m x 14 m | 11-15 m | 360° | DIN/ISO

96 m + 60 m

| | SWSL | | | | | SFSL | HSWSL |
|---|---|---|---|---|---|---|---|
| | 0 t | 0 t-250 t | | | | | |
| | 200 t | 160 t | | | | | |
| | 85° | 85° | 75° | 65° | 55° | | 85° |
| m | t | t | t | t | t | t | t |
| 31 | - | - | - | - | - | - | 60,0 |
| 34 | 46,1 | 46,1 | - | - | - | 46,7 | 59,0 |
| 38 | 43,6 | 44,1 | - | - | - | 46,0 | 56,5 |
| 42 | 41,5 | 42,1 | - | - | - | 45,1 | 54,0 |
| 46 | 39,4 | 40,1 | - | - | - | 44,2 | 51,5 |
| 50 | 37,3 | 38,2 | - | - | - | 43,0 | 49,2 |
| 54 | 34,0 | 36,2 | - | - | - | 43,0 | 46,8 |
| 58 | 30,2 | 34,6 | 41,0 | - | - | 42,0 | 44,6 |
| 62 | 26,9 | 33,0 | 41,0 | - | - | 41,0 | 42,4 |
| 66 | 24,0 | 31,2 | 40,0 | - | - | 40,0 | 40,2 |
| 69 | - | - | 38,5 | - | - | 39,2 | 38,6 |
| 70 | - | - | 38,0 | - | - | 39,0 | - |
| 74 | - | - | 37,0 | - | - | 37,0 | - |
| 78 | - | - | 35,0 | - | - | 36,0 | - |
| 82 | - | - | 33,0 | 29,6 | - | 35,0 | - |
| 84 | - | - | 28,6 | 29,4 | - | 34,5 | - |
| 86 | - | - | - | 29,2 | - | 34,0 | - |
| 90 | - | - | - | 27,6 | - | 33,0 | - |
| 94 | - | - | - | 25,9 | - | 30,0 | - |
| 98 | - | - | - | 24,2 | - | 26,0 | - |
| 100 | - | - | - | 23,4 | - | 24,5 | - |
| 102 | - | - | - | - | - | 23,0 | - |
| 104 | - | - | - | - | 20,4 | 21,6 | - |
| 106 | - | - | - | - | 20,1 | 20,3 | - |
| 110 | - | - | - | - | 19,2 | 17,5 | - |
| 114 | - | - | - | - | 17,9 | 14,6 | - |
| 118 | - | - | - | - | - | 12,0 | - |
| 122 | - | - | - | - | - | 9,5 | - |
| 126 | - | - | - | - | - | 7,1 | - |
| 130 | - | - | - | - | - | 4,7 | - |
| 134 | - | - | - | - | - | - | - |

96 m + 72 m

| | SWSL | | | | | SFSL | HSWSL |
|---|---|---|---|---|---|---|---|
| | 0 t | 0 t-250 t | | | | | |
| | 200 t | 160 t | | | | | |
| | 85° | 85° | 75° | 65° | 55° | | 85° |
| m | t | t | t | t | t | t | t |
| 35 | - | - | - | - | - | - | 45,8 |
| 38 | 35,4 | 35,4 | - | - | - | 36,3 | 45,1 |
| 42 | 33,8 | 34,1 | - | - | - | 35,7 | 43,6 |
| 46 | 32,3 | 32,8 | - | - | - | 35,0 | 42,0 |
| 50 | 30,8 | 31,4 | - | - | - | 34,2 | 40,4 |
| 54 | 29,2 | 29,9 | - | - | - | 33,3 | 38,7 |
| 58 | 27,6 | 28,4 | - | - | - | 33,0 | 37,1 |
| 62 | 24,4 | 27,0 | - | - | - | 33,0 | 35,5 |
| 64 | 22,9 | 26,5 | 32,0 | - | - | 32,5 | 34,7 |
| 66 | 21,5 | 26,0 | 32,0 | - | - | 32,0 | 34,0 |
| 70 | 19,0 | 25,0 | 31,0 | - | - | 31,0 | 32,5 |
| 74 | 16,8 | 24,0 | 30,0 | - | - | 30,0 | 30,9 |
| 78 | 14,8 | 23,0 | 29,0 | - | - | 30,0 | 29,4 |
| 80 | - | - | 29,0 | - | - | 29,5 | 28,7 |
| 82 | - | - | 28,0 | - | - | 29,0 | - |
| 86 | - | - | 27,0 | - | - | 28,0 | - |
| 90 | - | - | 26,0 | 22,1 | - | 27,0 | - |
| 94 | - | - | 25,0 | 21,7 | - | 26,0 | - |
| 96 | - | - | 20,6 | 21,3 | - | 25,5 | - |
| 98 | - | - | - | 20,7 | - | 25,0 | - |
| 102 | - | - | - | 19,5 | - | 22,7 | - |
| 106 | - | - | - | 18,3 | - | 19,0 | - |
| 110 | - | - | - | 17,1 | - | 17,0 | - |
| 112 | - | - | - | 16,5 | - | 15,7 | - |
| 114 | - | - | - | - | 14,3 | 14,5 | - |
| 118 | - | - | - | - | 13,8 | 11,9 | - |
| 122 | - | - | - | - | 12,8 | 9,5 | - |
| 126 | - | - | - | - | 11,8 | 7,1 | - |
| 130 | - | - | - | - | - | 4,9 | - |
| 134 | - | - | - | - | - | - | - |
| 138 | - | - | - | - | - | - | - |

**Remarks · Bemerkungen · Remarques**

Main boom angle 85°, 75°, 65° and 55°; capacities for intermediate boom positions are calculated by the crane control system IC-1
Hauptauslegerwinkel 85°, 75°, 65° und 55°; Traglasten für Zwischenstellungen des Hauptauslegers werden von der Kransteuerung IC-1 berechnet
Jarret de flèche principale 85°, 75°, 65° et 55°; le système de commande de la grue IC-1 calcule les charges pour les positions intermédiaires de la flèche

For HSWSL a boom power-kit is required
Für HSWSL ist ein Ausleger-Verstärkungs-Kit erforderlich
Un kit à fortifier de flèche principale est nécessaire pour HSWSL

autovictor

# SWSL /SFSL15°/ HSWSL

LIFTING CAPACITIES · TRAGFÄHIG-KEITEN · CAPACITÉS DE LEVAGE

14 m x 14 m | 11-15 m | 360° | DIN/ISO

96 m + 84 m

| | SWSL | | | | | SFSL | HSWSL |
|---|---|---|---|---|---|---|---|
| | 0 t | 0 t-250 t | | | | | |
| | 200 t | 160 t | | | | | |
| | 85° | 85° | 75° | 65° | 55° | | 85° |
| m | t | t | t | t | t | t | t |
| 38 | 26,9 | 27,3 | - | - | - | - | 33,3 |
| 42 | 26,9 | 27,3 | - | - | - | 27,4 | 33,3 |
| 46 | 25,6 | 26,1 | - | - | - | 26,9 | 33,3 |
| 50 | 24,5 | 25,0 | - | - | - | 26,3 | 32,2 |
| 54 | 23,4 | 24,0 | - | - | - | 26,0 | 31,1 |
| 58 | 22,3 | 23,0 | - | - | - | 26,0 | 29,9 |
| 62 | 21,1 | 22,0 | - | - | - | 26,0 | 28,8 |
| 66 | 20,0 | 21,0 | - | - | - | 25,0 | 27,6 |
| 68 | 18,7 | 21,0 | 24,0 | - | - | 25,0 | 27,0 |
| 70 | 17,5 | 21,0 | 24,0 | - | - | 25,0 | 26,5 |
| 74 | 15,3 | 20,0 | 24,0 | - | - | 24,0 | 25,4 |
| 78 | 13,3 | 19,0 | 23,0 | - | - | 23,0 | 24,4 |
| 82 | 11,5 | 18,0 | 23,0 | - | - | 23,0 | 23,4 |
| 86 | 9,9 | 17,0 | 22,0 | - | - | 22,0 | 22,3 |
| 90 | 8,5 | 17,0 | 21,0 | - | - | 21,0 | 21,3 |
| 92 | - | - | 21,0 | - | - | 21,0 | 20,8 |
| 94 | - | - | 20,0 | - | - | 21,0 | - |
| 96 | - | - | 20,0 | 15,4 | - | 20,5 | - |
| 98 | - | - | 20,0 | 15,4 | - | 20,0 | - |
| 102 | - | - | 18,5 | 15,2 | - | 19,0 | - |
| 106 | - | - | 14,5 | 14,6 | - | 18,0 | - |
| 108 | - | - | 14,1 | 14,2 | - | 17,5 | - |
| 110 | - | - | - | 13,9 | - | 17,0 | - |
| 114 | - | - | - | 13,1 | - | 13,8 | - |
| 118 | - | - | - | 12,3 | - | - | - |
| 122 | - | - | - | 11,6 | 9,4 | - | - |
| 124 | - | - | - | 11,2 | 9,4 | - | - |
| 126 | - | - | - | - | 9,3 | - | - |
| 130 | - | - | - | - | 8,7 | - | - |
| 134 | - | - | - | - | 7,8 | - | - |
| 138 | - | - | - | - | 6,9 | - | - |

96 m + 96 m

| | SWSL | | | | | SFSL | HSWSL |
|---|---|---|---|---|---|---|---|
| | 0 t | 0 t-250 t | | | | | |
| | 200 t | 160 t | | | | | |
| | 85° | 85° | 75° | 65° | 55° | | 85° |
| m | t | t | t | t | t | t | t |
| 42 | 19,1 | 19,4 | - | - | - | - | - |
| 46 | 19,1 | 19,4 | - | - | - | 19,6 | - |
| 50 | 18,2 | 19,0 | - | - | - | 19,2 | - |
| 54 | 17,4 | 18,0 | - | - | - | 19,0 | - |
| 58 | 16,6 | 18,0 | - | - | - | 19,0 | - |
| 62 | 15,7 | 17,0 | - | - | - | 19,0 | - |
| 66 | 14,9 | 16,0 | - | - | - | 19,0 | - |
| 70 | 14,1 | 16,0 | - | - | - | 18,0 | - |
| 74 | 13,2 | 15,0 | 17,0 | - | - | 18,0 | - |
| 78 | 12,4 | 15,0 | 17,0 | - | - | 18,0 | - |
| 82 | 10,7 | 14,0 | 17,0 | - | - | 17,0 | - |
| 86 | 9,0 | 13,0 | 17,0 | - | - | 16,0 | - |
| 90 | 7,6 | 13,0 | 16,0 | - | - | 16,0 | - |
| 94 | 6,2 | 12,0 | 16,0 | - | - | 15,0 | - |
| 98 | 5,0 | 11,0 | 15,0 | - | - | 15,0 | - |
| 101 | 4,1 | 11,0 | 14,7 | - | - | 14,2 | - |
| 102 | - | 11,0 | 14,5 | - | - | 14,0 | - |
| 104 | - | - | 14,0 | 9,4 | - | 14,0 | - |
| 106 | - | - | 14,0 | 9,4 | - | 14,0 | - |
| 110 | - | - | 13,5 | 9,3 | - | 13,0 | - |
| 114 | - | - | 12,5 | 8,9 | - | 13,0 | - |
| 118 | - | - | 8,7 | 8,3 | - | 12,0 | - |
| 120 | - | - | 8,3 | 8,1 | - | 11,4 | - |
| 122 | - | - | - | 7,8 | - | 10,9 | - |
| 126 | - | - | - | 7,3 | - | - | - |
| 130 | - | - | - | 6,7 | 4,3 | - | - |
| 134 | - | - | - | 6,2 | 4,3 | - | - |
| 136 | - | - | - | 5,9 | 4,2 | - | - |
| 138 | - | - | - | - | 4,0 | - | - |
| 142 | - | - | - | - | - | - | - |
| 146 | - | - | - | - | - | - | - |

**Remarks · Bemerkungen · Remarques**

Main boom angle 85°, 75°, 65° and 55°; capacities for intermediate boom positions are calculated by the crane control system IC-1
Hauptauslegerwinkel 85°, 75°, 65° und 55°; Traglasten für Zwischenstellungen des Hauptauslegers werden von der Kransteuerung IC-1 berechnet
Jarret de flèche principale 85°, 75°, 65° et 55°; le système de commande de la grue IC-1 calcule les charges pour les positions intermédiaires de la flèche

For HSWSL a boom power-kit is required
Für HSWSL ist ein Ausleger-Verstärkungs-Kit erforderlich
Un kit à fortifier de flèche principale est nécessaire pour HSWSL

# SWSL /SFSL15°/ HSWSL

LIFTING CAPACITIES · TRAGFÄHIG-KEITEN · CAPACITÉS DE LEVAGE

14 m x 14 m | 11-15 m | 360° | DIN/ISO

## 108 m + 36 m

| | SWSL | | | | | SFSL | HSWSL |
|---|---|---|---|---|---|---|---|
| | 0 t | 0 t-250 t | | | | | |
| | 200 t | 160 t | | | | | |
| | 85° | 85° | 75° | 65° | 55° | | 85° |
| m | t | t | t | t | t | t | t |
| 25 | - | - | - | - | - | - | 74,5 |
| 26 | - | - | - | - | - | - | 74,5 |
| 28 | - | - | - | - | - | - | 72,0 |
| 30 | - | - | - | - | - | - | 70,0 |
| 34 | - | - | - | - | - | - | 65,5 |
| 38 | - | - | - | - | - | - | 61,0 |
| 42 | - | - | - | - | - | - | 57,0 |
| 46 | - | - | - | - | - | - | 53,0 |
| 50 | - | - | - | - | - | - | - |

## 108 m + 48 m

| | | | | | | | |
|---|---|---|---|---|---|---|---|
| m | t | t | t | t | t | t | t |
| 28 | - | - | - | - | - | - | 57,5 |
| 30 | - | - | - | - | - | - | 57,5 |
| 34 | - | - | - | - | - | - | 54,0 |
| 38 | - | - | - | - | - | - | 51,0 |
| 42 | - | - | - | - | - | - | 48,3 |
| 46 | - | - | - | - | - | - | 45,3 |
| 50 | - | - | - | - | - | - | 42,7 |
| 54 | - | - | - | - | - | - | 40,2 |
| 58 | - | - | - | - | - | - | 37,6 |

## 108 m + 60 m

| | SWSL | | | | | SFSL | HSWSL |
|---|---|---|---|---|---|---|---|
| | 0 t | 0 t-250 t | | | | | |
| | 200 t | 160 t | | | | | |
| | 85° | 85° | 75° | 65° | 55° | | 85° |
| m | t | t | t | t | t | t | t |
| 32 | - | - | - | - | - | - | 43,9 |
| 34 | - | - | - | - | - | - | 43,9 |
| 38 | - | - | - | - | - | - | 41,9 |
| 42 | - | - | - | - | - | - | 39,8 |
| 46 | - | - | - | - | - | - | 37,6 |
| 50 | - | - | - | - | - | - | 35,5 |
| 54 | - | - | - | - | - | - | 33,3 |
| 58 | - | - | - | - | - | - | 31,6 |
| 62 | - | - | - | - | - | - | 29,9 |
| 66 | - | - | - | - | - | - | 28,2 |
| 70 | - | - | - | - | - | - | 26,5 |

**Remarks · Bemerkungen · Remarques**

Main boom angle 85°, 75°, 65° and 55°; capacities for intermediate boom positions are calculated by the crane control system IC-1
Hauptauslegerwinkel 85°, 75°, 65° und 55°; Traglasten für Zwischenstellungen des Hauptauslegers werden von der Kransteuerung IC-1 berechnet
Jarret de flèche principale 85°, 75°, 65° et 55°; le système de commande de la grue IC-1 calcule les charges pour les positions intermédiaires de la flèche

For HSWSL a boom power-kit is required
Für HSWSL ist ein Ausleger-Verstärkungs-Kit erforderlich
Un kit à fortifier de flèche principale est nécessaire pour HSWSL

autovictor

# SFVL / LFVL WORKING RANGES · ARBEITSBEREICHE · PORTÉES

13°

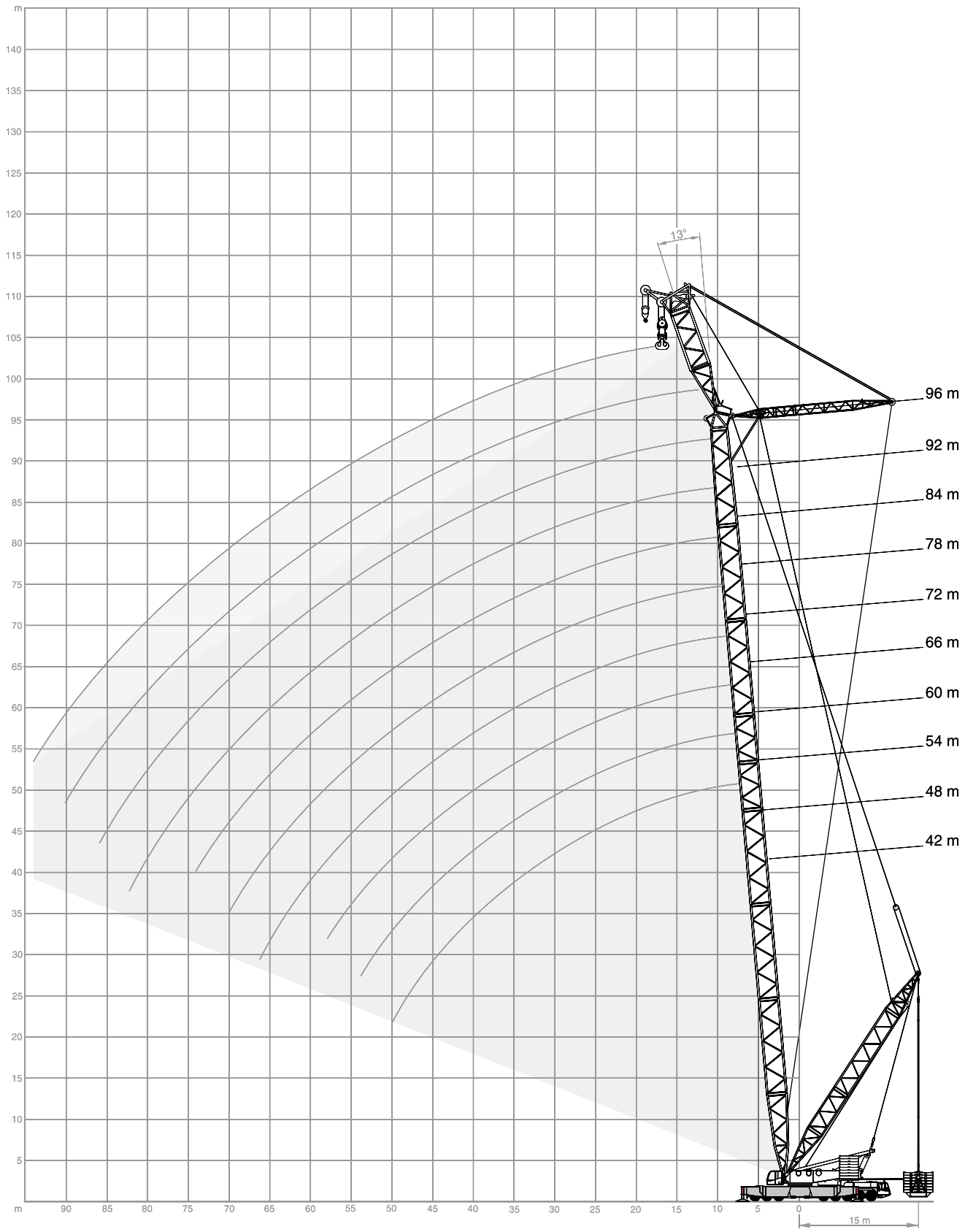

# SFVL / LFVL LIFTING CAPACITIES · TRAGFÄHIGKEITEN · CAPACITÉS DE LEVAGE

160 t | 11-15 m | 0-300 t | 12 m | 14 m x 14 m | 360° | DIN/ISO

| | 42 m | | | 48 m | | | 54 m | | | 60 m | | |
|---|---|---|---|---|---|---|---|---|---|---|---|---|
| | SFVL | | LFVL | SFVL | | LFVL | SFVL | | LFVL | SFVL | | LFVL |
| | 13° | 20° | 17,5° | 13° | 20° | 17,5° | 13° | 20° | 17,5° | 13° | 20° | 17,5° |
| m | t | t | t | t | t | t | t | t | t | t | t | t |
| 12 | 480,0 | - | - | 430,0 | - | - | - | - | - | - | - | - |
| 13 | 469,0 | - | 300,0 | 429,0 | - | 300,0 | - | - | 300,0 | - | - | - |
| 14 | 458,0 | 438,0 | 300,0 | 428,0 | 412,0 | 300,0 | 387,0 | 369,0 | 300,0 | 350,0 | - | 300,0 |
| 16 | 419,0 | 418,0 | 300,0 | 417,0 | 401,0 | 300,0 | 385,0 | 369,0 | 300,0 | 348,0 | 334,0 | 300,0 |
| 18 | 380,0 | 381,0 | 300,0 | 377,0 | 378,0 | 300,0 | 375,0 | 366,0 | 300,0 | 346,0 | 329,0 | 300,0 |
| 20 | 347,0 | 347,0 | 300,0 | 344,0 | 345,0 | 300,0 | 342,0 | 343,0 | 300,0 | 339,0 | 324,0 | 300,0 |
| 22 | 317,0 | 318,0 | 291,0 | 315,0 | 316,0 | 296,0 | 313,0 | 314,0 | 300,0 | 311,0 | 310,0 | 300,0 |
| 24 | 286,0 | 287,0 | 269,0 | 284,0 | 285,0 | 280,0 | 282,0 | 283,0 | 278,0 | 280,0 | 281,0 | 282,0 |
| 26 | 260,0 | 261,0 | 249,0 | 262,0 | 262,0 | 260,0 | 261,0 | 260,0 | 261,0 | 254,0 | 256,0 | 259,0 |
| 28 | 239,0 | 239,0 | 230,0 | 242,0 | 242,0 | 240,0 | 240,0 | 241,0 | 240,0 | 237,0 | 238,0 | 238,0 |
| 30 | 220,0 | 221,0 | 212,0 | 223,0 | 223,0 | 221,0 | 222,0 | 222,0 | 222,0 | 219,0 | 220,0 | 220,0 |
| 34 | 189,0 | 190,0 | 180,0 | 190,0 | 191,0 | 188,0 | 189,0 | 190,0 | 192,0 | 188,0 | 188,0 | 190,0 |
| 38 | 160,0 | 163,0 | 152,0 | 163,0 | 163,0 | 160,0 | 164,0 | 165,0 | 165,0 | 163,0 | 163,0 | 166,0 |
| 42 | 137,0 | 138,0 | 131,0 | 143,0 | 142,0 | 137,0 | 142,0 | 142,0 | 144,0 | 143,0 | 143,0 | 145,0 |
| 46 | 113,0 | 114,0 | 115,0 | 123,0 | 124,0 | 119,0 | 128,0 | 128,0 | 125,0 | 127,0 | 127,0 | 126,0 |
| 50 | 92,0 | - | 97,5 | 104,0 | 104,0 | 105,0 | 110,0 | 111,0 | 108,0 | 113,0 | 113,0 | 112,0 |
| 54 | - | - | - | 86,0 | - | 91,5 | 94,5 | 95,0 | 96,0 | 98,0 | 98,5 | 99,0 |
| 58 | - | - | - | - | - | - | 79,5 | 80,0 | 85,0 | 84,5 | 85,0 | 87,0 |
| 62 | - | - | - | - | - | - | - | - | - | 72,0 | 72,5 | 77,5 |
| 66 | - | - | - | - | - | - | - | - | - | 60,0 | - | - |
| 70 | - | - | - | - | - | - | - | - | - | - | - | - |

| | 66 m | | | 72 m | | | 78 m | | | 84 m | | |
|---|---|---|---|---|---|---|---|---|---|---|---|---|
| | SFVL | | LFVL | SFVL | | LFVL | SFVL | | LFVL | SFVL | | LFVL |
| | 13° | 20° | 17,5° | 13° | 20° | 17,5° | 13° | 20° | 17,5° | 13° | 20° | 17,5° |
| m | t | t | t | t | t | t | t | t | t | t | t | t |
| 14 | 297,0 | - | 277,0 | - | - | - | - | - | - | - | - | - |
| 15 | 296,0 | - | 277,0 | 259,0 | - | - | - | - | - | - | - | - |
| 16 | 295,0 | 284,0 | 277,0 | 259,0 | 252,0 | 245,0 | 219,0 | 211,0 | 205,0 | 194,0 | - | 181,0 |
| 18 | 293,0 | 282,0 | 277,0 | 258,0 | 250,0 | 245,0 | 217,0 | 211,0 | 205,0 | 192,0 | 187,0 | 181,0 |
| 20 | 291,0 | 280,0 | 277,0 | 257,0 | 249,0 | 245,0 | 215,0 | 209,0 | 205,0 | 190,0 | 185,0 | 181,0 |
| 22 | 282,0 | 277,0 | 275,0 | 254,0 | 247,0 | 245,0 | 213,0 | 207,0 | 205,0 | 189,0 | 183,0 | 181,0 |
| 24 | 270,0 | 267,0 | 262,0 | 246,0 | 242,0 | 240,0 | 211,0 | 205,0 | 204,0 | 186,0 | 182,0 | 181,0 |
| 26 | 253,0 | 254,0 | 249,0 | 239,0 | 235,0 | 232,0 | 208,0 | 203,0 | 202,0 | 183,0 | 179,0 | 179,0 |
| 28 | 231,0 | 232,0 | 236,0 | 229,0 | 229,0 | 224,0 | 205,0 | 200,0 | 199,0 | 179,0 | 176,0 | 177,0 |
| 30 | 218,0 | 216,0 | 218,0 | 210,0 | 211,0 | 215,0 | 202,0 | 197,0 | 197,0 | 176,0 | 172,0 | 175,0 |
| 34 | 187,0 | 187,0 | 188,0 | 185,0 | 182,0 | 185,0 | 178,0 | 179,0 | 184,0 | 165,0 | 164,0 | 168,0 |
| 38 | 161,0 | 162,0 | 164,0 | 160,0 | 160,0 | 162,0 | 154,0 | 155,0 | 158,0 | 149,0 | 149,0 | 154,0 |
| 42 | 141,0 | 142,0 | 144,0 | 140,0 | 140,0 | 142,0 | 135,0 | 135,0 | 138,0 | 132,0 | 133,0 | 136,0 |
| 46 | 125,0 | 125,0 | 128,0 | 123,0 | 124,0 | 126,0 | 122,0 | 122,0 | 122,0 | 116,0 | 117,0 | 120,0 |
| 50 | 112,0 | 112,0 | 112,0 | 110,0 | 110,0 | 112,0 | 108,0 | 108,0 | 110,0 | 104,0 | 104,0 | 107,0 |
| 54 | 99,5 | 100,0 | 100,0 | 98,0 | 98,5 | 100,0 | 95,5 | 96,0 | 99,0 | 92,0 | 92,5 | 96,5 |
| 58 | 87,0 | 87,5 | 90,0 | 86,5 | 87,0 | 89,0 | 85,0 | 85,5 | 89,0 | 82,0 | 82,0 | 86,5 |
| 62 | 75,5 | 76,0 | 80,0 | 76,0 | 76,5 | 80,0 | 75,0 | 75,5 | 80,5 | 73,0 | 73,5 | 78,0 |
| 66 | 65,0 | 65,0 | 70,0 | 66,0 | 66,5 | 71,5 | 66,0 | 66,5 | 71,5 | 64,5 | 65,0 | 70,0 |
| 70 | 54,5 | - | 60,0 | 57,0 | 57,5 | 62,5 | 58,0 | 58,0 | 63,5 | 57,0 | 57,0 | 62,0 |
| 74 | - | - | - | 48,7 | - | 53,5 | 50,0 | 50,5 | 55,5 | 49,8 | 50,0 | 55,0 |
| 78 | - | - | - | - | - | - | 42,9 | 43,1 | 48,1 | 43,0 | 43,3 | 48,3 |
| 82 | - | - | - | - | - | - | 35,5 | - | - | 36,6 | 36,8 | 41,8 |
| 86 | - | - | - | - | - | - | - | - | - | 30,3 | - | - |
| 90 | - | - | - | - | - | - | - | - | - | - | - | - |

autovictor

# SFVL / LFVL LIFTING CAPACITIES · TRAGFÄHIGKEITEN · CAPACITÉS DE LEVAGE

160 t | 11-15 m | 0-300 t | 12 m | 14 m x 14 m | 360° | DIN/ISO

| | 90 m | | | 96 m | | |
|---|---|---|---|---|---|---|
| | SFVL | | LFVL | SFVL | | LFVL |
| | 13° | 20° | 17,5° | 13° | 20° | 17,5° |
| m | t | t | t | t | t | t |
| 16 | 145,0 | - | - | - | - | - |
| 17 | 145,0 | - | 145,0 | 128,0 | - | 129,0 |
| 18 | 145,0 | 141,0 | 145,0 | 128,0 | 124,0 | 129,0 |
| 20 | 142,0 | 139,0 | 142,0 | 125,0 | 124,0 | 127,0 |
| 22 | 142,0 | 138,0 | 140,0 | 123,0 | 121,0 | 124,0 |
| 24 | 142,0 | 138,0 | 137,0 | 122,0 | 119,0 | 122,0 |
| 26 | 142,0 | 138,0 | 134,0 | 122,0 | 119,0 | 119,0 |
| 28 | 140,0 | 137,0 | 132,0 | 121,0 | 119,0 | 116,0 |
| 30 | 139,0 | 135,0 | 129,0 | 119,0 | 117,0 | 114,0 |
| 34 | 135,0 | 132,0 | 123,0 | 116,0 | 114,0 | 108,0 |
| 38 | 129,0 | 127,0 | 117,0 | 112,0 | 110,0 | 102,0 |
| 42 | 123,0 | 121,0 | 111,0 | 108,0 | 106,0 | 97,5 |
| 46 | 108,0 | 108,0 | 105,0 | 103,0 | 101,0 | 92,0 |
| 50 | 97,5 | 96,5 | 99,0 | 93,0 | 94,0 | 87,0 |
| 54 | 88,5 | 89,0 | 92,5 | 82,0 | 83,0 | 82,0 |
| 58 | 79,0 | 79,0 | 84,5 | 75,0 | 75,0 | 77,0 |
| 62 | 70,5 | 71,0 | 76,0 | 66,5 | 67,0 | 72,0 |
| 66 | 62,5 | 63,0 | 68,0 | 59,5 | 59,5 | 65,0 |
| 70 | 55,0 | 55,5 | 60,5 | 52,5 | 53,0 | 58,0 |
| 74 | 48,6 | 48,9 | 54,0 | 46,3 | 46,6 | 51,5 |
| 78 | 42,3 | 42,6 | 47,7 | 40,4 | 40,7 | 45,9 |
| 82 | 36,4 | 36,7 | 41,7 | 34,9 | 35,2 | 40,3 |
| 86 | 30,8 | 31,0 | 36,0 | 29,8 | 30,0 | 35,1 |
| 90 | 25,3 | - | 30,5 | 24,8 | 25,0 | 30,0 |
| 94 | - | - | - | 20,0 | - | 25,1 |

## KEY · ZEICHENERKLÄRUNG · LÉGENDE

Outrigger base · Stützbasis · Basis de calage

Counterweight · Gegengewicht · Contrepoids

Superlift counterweight · Superlift-Gegengewicht · Contrepoids Superlift

Superlift radius · Superlift-Radius · rayon Superlift

Load radius · Lastradius · Portée

Main boom · Hauptausleger · Flèche principale

Fly jib · Hilfsausleger · Fléchette

Main boom angle · Hauptauslegerwinkel · Jarret de flèche principale

Fly jib angle · Hilfsauslegerwinkel · Jarret de fléchette

„D“

S: heavy · schwer · lourd

L: light · leicht · léger

H: Main boom · Hauptausleger · Flèche principale

W: Luffing fly jib · Wippbarer Hilfsausleger · Fléchette à volée variable

F: Fixed fly jib · Starrer Hilfsausleger · Fléchette fixe

SL: Superlift

SGL: Heavy base length · Schwere Grundlänge · Longueur de base lourde

autovictor

# TECHNICAL DESCRIPTION

## CARRIER

| | |
|---|---|
| **Drive / Steering** | 16 x 8 x 16. |
| **Frame** | In-plant built special main frame of high-strength fine-grain structural steel, with pot-shaped centre section to accommodate the outrigger beams. |
| **Outriggers** | 4-point outrigger system, 4 outrigger beams, fully hydraulic horizontal and vertical extension, providing 360° continuous rotation. Outrigger loading indicator. Outrigger base 14 x 14 m and 10 x 10 m. Outriggers with hydraulic pin-connections to facilitate disassembly for transportation. |
| **Engine** | Water-cooled 8-cylinder DaimlerChrysler diesel engine OM 502 LA, output 482 kW (646 hp) at 1800 $^{1}$/min, torque 2820 Nm at 1300 $^{1}$/min. The engine complies with EUROMOT 3a, EPA T3 and Carb regulations. |
| **Transmission** | ZF-TC-Tronic, automatical transmission with torque converter and hydraulic retarder, 12 forward speeds and 2 reverse. |
| **Axles** | 3 + 4, 6 + 7 driving, all axles steering, hydropneumatically suspended and hydraulically blockable. |
| **Wheels and tyres** | 16 wheels, 14.00 R 25. |
| **Steering** | Dual-circuit semiblock mechanical steering with hydraulic booster. |
| **Brakes** | In conformity with EC-directives. Sustained action brake: constant decompression valve, exhaust brake, hydraulic retarder integrated into gearbox. |
| **Electrical equipment** | 24 V system, lighting in compliance with German StVZO and EC regulations. |
| **Driver's cab** | Rubber-mounted low-line steel cab, ergonomic design, with pneumatically suspended driver's seat and one passenger's seat; vertically adjustable steering wheel; heated outside mirrors, right-hand mirror electrically adjustable; dashboard with clearly arranged instrumentation and carrier controls. |

## SUPERSTRUCTURE

| | |
|---|---|
| **Counterweight** | 160 t. |
| **Frame** | Torsion-resistant welded structure fabricated of high-strength fine-grain structural steel. Connected to carrier by triple-row roller bearing slew ring. |
| **Drive** | DaimlerChrysler diesel engine type OM 502 LA, 390 kW (530 hp) at 1800 $^{1}$/min, torque 2400 Nm at 1300 $^{1}$/min. The engine complies with EUROMOT 3a, EPA T3 and Carb regulations. Pump distribution gearbox with five variable displacement axial piston pumps, and gear pumps. Silencer with spark-arrestor. |
| **Rope drums** | The standard superstructure equipment includes three rope drums – hoist 1, hoist 2 and boom hoist. The drums are powered by hydraulic motors through closed planetary gear units running in oil bath. All rope drums have spring-applied, hydraulically released multi-disk brakes and non-wearing hydraulic braking for load lowering. Rope ends H 1, 2, 3 and W 1, 2 equipped with quick-connect rope end fittings. Hoists H 1 + 2 are removable to minimise weight for transportation. |
| **A-frame** | Hydraulic raising system for A-frame as standard. |
| **Slew unit** | Powered by hydraulic motor through closed, planetary gear unit running in oil bath. Spring-applied, hydraulically released holding brake and non-wearing hydraulic braking. |
| **Control system** | Demag IC-1: Electronic proportional valve pilot control integrated in stored-program control system incl. diagnostics. 2 colour monitors, safe load indicator operated via a touchscreen. Working speeds infinitely variable controlled by the lever position. Automatic power control for optimal utilisation of engine output, wireless emergency control system. |
| **Cabin** | Comfortable cab with large windscreen and airconditioner. Safety-glazing all around, roof window, self-contained hot air heater, full instrumentation and crane controls. The cab can be tilted back for improved operator view of boom point. A camera system is installed to monitor the rope drums. For transportation, the cab swings in front of the superstructure to minimise width. |
| **Electrical equipment** | 24 V d. c. system (2 x batteries 12 V, 200 Ah). |

## OPTIONAL EQUIPMENT

| | |
|---|---|
| **Counterweight** | 40 t on superstructure<br>7.5 t counterweights<br>casted counterweights |
| **Support wheels** | For on-site travel with attachments and partial counterweight. |
| **Wheels and tyres** | Wide tyres 17.00 R 25 optionally available, carrier width with these tyres 3.15 m. |
| **Independent rear axle steering** | |
| **Spare wheel with mount** | |
| **Air conditioner** | On the carrier. |

## TECHNICAL DESCRIPTION

### BOOM CONFIGURATIONS S AND L

| | |
|---|---|
| **SH:** | Main boom: foot section 10.5 m (used to install drums W1/H3),<br>inserts 12 m and 6 m (type 2724) and tapered insert 12 m, head with sheave assembly 600 t 1.5 m.<br>Main boom lengths: 24-84 m. |
| **SH / LH:** | Main boom: same as SH, extended by type 2421 from the fly jib and by top section 7.5 m.<br>Main boom lengths: 66-102 m. |
| **SW:** | Main boom: same as SH.<br>Fly jib: foot section 4.5 m, inserts 12 m and 6 m (type 2421) and top section 7.5 m.<br>Main boom lengths: 30-66 m.<br>Fly jib lengths: 24-84 m. |
| **SSL:** | Main boom: same as SH.<br>Superlift equipment, Superlift counterweight 0-300 t (at 50 t increments).<br>Main boom lengths: 36-96 m. |
| **HSSL:** | Main Boom: same as SH/SSL + boom power-kit.<br>Superlift equipment, Superlift counterweight 0-300 t (at 50 t increments).<br>Main boom lengths: 54-108 m. |
| **SSL / LSL:** | Main boom: same as SH 84 m, extended by type 2421 from the fly jib and by top section 7.5 m.<br>Superlift equipment, Superlift counterweight 0-300 t (at 50 t increments).<br>Main boom lengths: 90-138 m. |
| **SWSL:**<br>**(SFSL)** | Main boom: same as SH.<br>Fly jib: same as SW.<br>Superlift equipment, Superlift counterweight 0-300 t (at 50 t increments).<br>Main boom lengths: 36-96 m.<br>Fly jib lengths: 24-96 m. |
| **HSWSL:** | Main Boom: same as HSSL.<br>Fly jib: same as SW/SWSL.<br>Superlift equipment, Superlift counterweight 0-300 t (at 50 t increments).<br>Main boom lengths: 54-108 m.<br>Fly jib lengths: 24-96 m. |
| **LF2:** | Main boom: same as SH, SSL, HSSL, SH/LH, SH/LH SGLmax; SSL/LSL, SSL/LSL SGLmax.<br>Fly jib lengths: 12, 24, 36 m.<br>Fly jib offsets: 10°, 15°, 20° for jib length 12 m.<br>Fly jib offsets: 10°, 20°, 30° for jib lengths 24-36 m. |
| **SFVL:** | Main boom: same as SH, lengths 42-96 m, without sheave assembly.<br>Fly jib: foot section 4.5 m, insert 6 m; heavy-duty head 1.5 m.<br>Sheave assembly 600 t same as SH. |
| **LFVL:** | Main boom: same as SH, lengths 42-96 m, without sheave assembly.<br>Fly jib: foot section 4.5 m, jib top section 7.5 m. |
| **SH / LH SGLmax:** | Same as SH, extended by boom power-kit + jib top section.<br>Main boom lengths: 78-102 m. |
| **SSL / LSL SGLmax:** | Same as SSL, extended by boom power-kit + jib top section.<br>Main boom lengths: 90-138 m. |
| **Reeving winch** | Mounted on superstructure. |
| **Operator aids** | Electronic safe load indicator, hoist limit switch, limit switches for boom movements, hydraulic boom backstops, anemometer. |

### OPTIONAL EQUIPMENT

| | |
|---|---|
| **Power-kit for main boom** | Consisting of 2-4 additional heavy main boom sections; standard main boom 84 m required. |
| **Superlift equipment standard** | Mast 30 m, winch with rope and tray for 300 t. Mast radii 11, 13 and 15 m by adjusting the Superlift mast. |
| **Superlift equipment with telescopic cylinder** | Mast 30 m, winch with rope, SL telescopic cylinder and tray for 300 t. Mast position 15 m. Superlift counterweight can be adjusted from 13 to 17 m. |
| **Hoist H3** | Additional rope drum on main boom (for LF2 or runner operation). Line pull same as H1, rope length 650 m. |
| **Runner 30 t** | Approx. 2 m for installation on boom head or top section (not in conjunction with LF2). |
| **Runner 60 t** | |
| **Hydraulic pinning of boom sections** | |
| **W1 as H3** | Optional utilisation of the W1 luffing jib as a H3 hoist system. |

autovictor

## TECHNISCHE BESCHREIBUNG

### UNTERWAGEN

| | |
|---|---|
| **Antrieb / Lenkung** | 16 x 8 x 16. |
| **Rahmen** | Eigengefertigter Spezialträgerrahmen aus hochfestem Feinkornbaustahl, mit zentralem Topf zur Aufnahme der Stützträger. |
| **Abstützung** | 4-Punkt-Abstützung, 4 Stützträger, vollhydraulisch horizontal und vertikal ausfahrbar, für 360° Arbeitsbereich. Stützkraftanzeige. Stützbasis 14 x 14 m und 10 x 10 m. Stützen sind hydraulisch angebolzt und separat zu transportieren. |
| **Motor** | Wassergekühlter 8-Zylinder DaimlerChrysler Dieselmotor OM 502 LA, Leistung: 482 kW (646 PS) bei 1800 $^{1}$/min, Drehmoment 2820 Nm bei 1300 $^{1}$/min. Der Motor erfüllt EUROMOT 3a, EPA T3 und Carb-Vorschriften. |
| **Getriebe** | ZF-TC-Tronic, automatisiert. Drehmomentwandler und hydraulischer Retarder, 12 Vorwärts- und 2 Rückwärtsgänge. |
| **Achsen** | 3. + 4., 6. + 7. Achse angetrieben, alle Achsen gelenkt, alle Achsen hydropneumatisch gefedert und hydraulisch blockierbar. |
| **Bereifung** | 16-fach, 14.00 R 25. |
| **Lenkung** | 2-Kreis-Hydro-Halbblocklenkung. |
| **Bremsen** | Nach EG-Richtlinien; Dauerbremse: Konstantdrossel, Auspuffklappenbremse, hydraulischer Retarder im Getriebe. |
| **Elektrische Anlage** | Betriebsspannung 24 Volt, Beleuchtung nach StVZO und EG-Richtlinie. |
| **Fahrerkabine** | Elastisch gelagerte Low-Line-Kabine aus Stahlblech, ergonomisch gestaltet, mit einem pneumatisch gefederten Fahrersitz und einem Beifahrersitz; höhenverstellbarem Lenkrad; beheizbare Außenspiegel, rechts elektrisch verstellbar; übersichtliches Armaturenbrett mit allen erforderlichen Bedien- und Kontrollelementen. |

### OBERWAGEN

| | |
|---|---|
| **Gegengewicht** | 160 t. |
| **Rahmen** | Verformungssteife Schweißkonstruktion aus hochfestem Feinkornbaustahl. Verbindung zum Unterwagen durch 3-reihige Rollendrehverbindung. |
| **Antrieb** | DaimlerChrysler Dieselmotor Typ OM 502 LA, 390 kW (530 PS) bei 1800 $^{1}$/min, Drehmoment 2400 Nm bei 1300 $^{1}$/min. Der Motor erfüllt EUROMOT 3a, EPA T3 und Carb-Vorschriften. Pumpenverteilergetriebe mit fünf verstellbaren Axialkolbenpumpen und zusätzlichen Zahnradpumpen. Schalldämpfer mit Funkenfänger. |
| **Seilwinden** | Der Oberwagen ist serienmäßig mit drei Seilwinden – Hubwerk 1, Hubwerk 2 und Einziehwerk – ausgerüstet. Der Antrieb der Winden erfolgt durch Hydromotoren über geschlossene, ölbadgeschmierte Planetengetriebe. Alle Seilwinden sind mit federbelasteten, hydraulisch gelüfteten Lamellenbremsen und verschleißfreier, hydraulischer Bremsung für den Senkvorgang ausgerüstet. Die Seilenden H 1, 2, 3 und W 1, 2 sind mit Preßfitting und Taschen ausgestattet. Zur Reduzierung der Transportgewichte sind die Winden H 1 + 2 ausbaubar. |
| **A-Bock** | Hydraulische A-Bock-Umlage serienmäßig. |
| **Drehwerk** | Ein Drehwerk mit Antrieb durch Hydromotor über geschlossenes, ölbadgeschmiertes Planetengetriebe. Federbelastete, hydraulisch gelüftete Haltebremse und verschleißfreie hydraulische Bremsung. |
| **Steuerung** | Demag IC-1: Elektronische Proportionalventilvorsteuerung integriert in eine speicherprogrammierte Steuerung mit Fehlerdiagnose. Zwei Farbbildschirme, Bedienung über Touchscreen. Die Arbeitsgeschwindigkeiten werden durch die Hebelstellung stufenlos geregelt. Leistungsregelung der Antriebe zur optimalen Nutzung der Motorleistung, drahtlose Notsteuerung. |
| **Kabine** | Komfortkabine mit großem Frontfenster und Klimaanlage. Sicherheitsverglasung rundum, Dachfenster, motorunabhängige Warmluftheizung und Steuer- und Kontrollelementen für die Kranfunktionen. Die Kabine ist zur Sichtverbesserung nach hinten neigbar. Zur Überwachung der Winden im Oberwagen ist ein Kamerasystem installiert. Während des Transportes ist die Kabine vor den Oberwagen geschwenkt. |
| **Elektrische Anlage** | 24 V Gleichstrom (2 x Batterie 12 V, 200 Ah). |

### ZUSATZAUSRÜSTUNG

| | |
|---|---|
| **Gegengewicht** | 40 t am Oberwagen<br>7,5 t Gegengewichte<br>Gegengewichte aus Guss |
| **Stützräder** | Zum Verfahren auf der Baustelle mit Einrichtung und Teilgegengewicht. |
| **Bereifung** | Breitreifen 17.00 R 25 erhältlich. Breite des Unterwagens mit Breitreifen: 3,15 m. |
| **Unabhängige Hinterachslenkung** | |
| **Reserverad und Halterung** | |
| **Klimaanlage** | Am Unterwagen. |

## TECHNISCHE BESCHREIBUNG

### AUSLEGERVARIANTEN S UND L

| | |
|---|---|
| **SH:** | Hauptausleger: Fußstück 10,5 m (geeignet zum Einbau der Winde W1/H3),<br>Zwischenstücke 12 m und 6 m (Typ 2724) und Reduzierstück 12 m, Kopf mit Rollensatz 600 t 1,5 m.<br>Hauptauslegerlängen: 24-84 m. |
| **SH / LH:** | Hauptausleger: wie SH, verlängert mit Typ 2421 aus Hilfsausleger und Spitze 7,5 m.<br>Hauptauslegerlängen: 66-102 m. |
| **SW:** | Hauptausleger: wie SH.<br>Hilfsausleger: Fußstück 4,5 m, Zwischenstücke 12 m und 6 m (Typ 2421) und Spitze 7,5 m.<br>Hauptauslegerlängen: 30-66 m.<br>Hilfsauslegerlängen: 24-84 m. |
| **SSL:** | Hauptausleger: wie SH.<br>Superlift-Einrichtung, Superliftgegengewicht 0-300 t (Stufung 50 t).<br>Hauptauslegerlängen: 36-96 m. |
| **HSSL:** | Hauptausleger: wie SH/SSL + Hauptausleger-Verstärkungs-Kit.<br>Superlift-Einrichtung, Superliftgegengewicht 0-300 t (Stufung 50 t).<br>Hauptauslegerlängen: 54-108 m. |
| **SSL / LSL:** | Hauptausleger: wie SH 84 m, verlängert mit Typ 2421 aus Hilfsausleger und Spitze 7,5 m.<br>Superlift-Einrichtung, Superliftgegengewicht 0-300 t (Stufung 50 t).<br>Hauptauslegerlängen: 90-138 m. |
| **SWSL:<br>(SFSL)** | Hauptausleger: wie SH.<br>Hilfsausleger: wie SW.<br>Superlift-Einrichtung, Superliftgegengewicht 0-300 t (Stufung 50 t).<br>Hauptauslegerlängen: 36-96 m.<br>Hilfsauslegerlängen: 24-96 m. |
| **HSWSL:** | Hauptausleger: wie HSSL.<br>Hilfsausleger: wie SW/SWSL.<br>Superlift-Einrichtung, Superliftgegengewicht 0-300 t (Stufung 50 t).<br>Hauptauslegerlängen: 54-108 m.<br>Hilfsauslegerlängen: 24-96 m. |
| **LF2:** | Hauptausleger: wie SH, SSL, HSSL, SH/LH, SH/LH SGLmax; SSL/LSL, SSL/LSL SGLmax.<br>Hilfsauslegerlängen: 12, 24, 36 m.<br>Hilfsausleger-Vorneigung: 10°, 15°, 20° für Hilfsauslegerlänge 12 m.<br>Hilfsausleger-Vorneigung: 10°, 20°, 30° für Hilfsauslegerlängen 24-36 m. |
| **SFVL:** | Hauptausleger: wie SH, Längen 42-96 m, ohne Rollensatz.<br>Hilfsausleger: Fußstück 4,5 m, Zwischenstück 6 m; Schwerlastkopf 1,5 m.<br>Rollensatz 600 t wie SH. |
| **LFVL:** | Hauptausleger: wie SH, Längen 42-96 m, ohne Rollensatz.<br>Hilfsausleger: Fußstück 4,5 m, Hilfsausleger-Spitze 7,5 m. |
| **SH / LH SGLmax:** | Wie SH, verlängert um Hauptausleger-Verstärkungs-Kit + Hilfsausleger-Spitze.<br>Hauptauslegerlängen: 78-102 m. |
| **SSL / LSL SGLmax:** | Wie SSL, verlängert um Hauptausleger-Verstärkungs-Kit + Hilfsausleger-Spitze.<br>Hauptauslegerlängen: 90-138 m. |
| **Einscherwinde** | Auf Oberwagen angebaut. |
| **Sicherheitseinrichtungen** | Elektronischer Lastmomentbegrenzer, Hubendschalter, Endschalter für Auslegerbewegungen, hydraulische Ausleger-Rückfallsicherungen, Windmesser. |

### ZUSATZAUSRÜSTUNG

| | |
|---|---|
| **Hauptausleger-Verstärkungs-Kit** | Bestehend aus 2-4 zusätzlichen schweren Hauptauslegerstücken; Standard-Hauptausleger 84 m erforderlich. |
| **Superlift-Einrichtung Standard** | Mast 30 m, Winde mit Seil und Traverse für 300 t. Mastradien 11, 13 und 15 m, durch Verstellung der Mastposition. |
| **Superlift-Einrichtung Teleskopverstellung** | Mast 30 m, Winde mit Seil, Teleskopverbindung und Traverse für 300 t. Maststellung 15 m. Superlift-Gegengewicht verstellbar von 13 bis 17 m. |
| **Seilwinde H3** | Zusätzliche Seilwinde im Hauptausleger (zum Betrieb an LF2 oder Runner). Seilzug wie H1, Seillänge 650 m. |
| **Runner 30 t** | Ca. 2 m zum Anbau an Kopf oder Spitze (nicht in Verbindung mit LF2). |
| **Runner 60 t** | |
| **Auslegerteile hydraulisch verbolzbar** | |
| **W1 als H3** | Option zur Verwendung des Wippwerks W1 als Hubwerk H3. |

autovictor

# DESCRIPTIF TECHNIQUE

## CHÂSSIS

| | |
|---|---|
| **Entraînement / direction** | 16 x 8 x 16. |
| **Cadre-châssis** | Cadre-châssis spécial fabriqué dans nos usines, réalisé en tôle d'acier de construction de haute résistance à grains fins, avec partie centrale cylindrique recevant les poutres de calage. |
| **Calage** | Calage de quatre points, constitué de quatre poutres, extractibles hydrauliquement sur un plan horizontal et de quatre vérins verticaux, permettant une orientation sur 360° en continu. Indicateur de force de calage. Bases de calage 14 x 14 m et 10 x 10 m. Poutres de calage à brochage hydraulique facilitant le démontage pour le transport. |
| **Moteur** | DaimlerChrysler diesel OM 502 LA, 8 cylindres, refroidi par eau, puissance 482 kW (646 CV) à 1800 $^{1}$/min, couple 2820 Nm à 1300 $^{1}$/min. Le moteur satisfait aux réglements EUROMOT 3a, EPA T3 et Carb. |
| **Transmission** | ZF-TC-Tronic, transmission automatique avec convertisseur de couple et ralentisseur hydraulique, 12 vitesses AV et 2 AR. |
| **Essieux** | 3 + 4, 6 + 7 moteurs, tous les essieux sont directeurs avec suspension hydro-pneumatique et blocage hydraulique. |
| **Pneumatiques** | 16 pneus, 14.00 R 25. |
| **Direction** | Direction à servo-commande hydraulique, du type demi-bloc, à double circuit. |
| **Freinage** | Selon normes CE. Frein continu: soupape d'étranglement, frein sur échappement, ralentisseur hydraulique intégré à la transmission. |
| **Installation électrique** | Système 24 V, éclairage selon normes StVZO et CE. |
| **Cabine châssis** | Cabine surbaissée en tôle d'acier, à suspension élastique, conception ergonomique, siège conducteur à suspension pneumatique et un siège passager; volant réglable en hauteur; rétroviseurs extérieurs dégivrants, réglable électriquement celui-ci du côté droit; tableau de bord clair et lisible comprenant les manettes de commande et les indicateurs de contrôle. |

## PARTIE SUPÉRIEURE

| | |
|---|---|
| **Contrepoids** | 160 t. |
| **Charpente** | Structure mécano-soudée, rigide à la torsion, réalisée en acier de construction de haute résistance à grains fins. Couronne d'orientation à trois rangées de rouleaux servant de jonction entre la partie tournante et le châssis. |
| **Moteur et transmission** | Moteur diesel DaimlerChrysler, type OM 502 LA, 390 kW (530 CV) à 1800 $^{1}$/min, couple 2400 Nm à 1300 $^{1}$/min. Le moteur satisfait aux réglements EUROMOT 3a, EPA T3 et Carb. Boîte de distribution à cinq pompes hydrauliques à débit variable du type à pistons axiaux ainsi que pompes à engrenages. Disposit d'echappe avec pare-étincelles. |
| **Tambours** | L'équipement standard de la partie tournante comprend trois tambours – treuil no 1, treuil no 2 et mécanisme de relevage. Les tambours sont entraînés par des moteurs hydrauliques munis de réducteurs planétaires, sous bain d'huile, en carter étanche. Tous les tambours sont munis de freins à disques multiples, à commande par ressorts, et desserrés hydrauliquement. Freinage anti-usure hydraulique pour descendre la charge. Les pattes de câble H 1, 2, 3 et W 1, 2 sont équipées des attaches à jonction rapide. Treuils H 1 + 2 sont démontables pour diminuer le poids de transport. |
| **Chevalet** | Système de relevage hydraulique pour chevalet en serie. |
| **Mécanisme d'orientation** | Entraîné par moteur hydraulique avec réducteur planétaire, sous bain d'huile, en carter étanche. Frein d'arrêt à commande par ressorts, desserré hydrauliquement ainsi que freinage anti-usure hydraulique. |
| **Commande** | Demag IC-1 : Pilotage électronique de soupapes proportionnnels intégré dans un automate programmable avec diagnostic de dysfonctionnement. 2 écrans couleur, commande du C.E.C. par écran tactile. Les vitesses de travail sont réglées sans paliers par la position du levier. Régulation automatique pour une exploitation optimale de la puissance du moteur, commande d'urgence sans fil. |
| **Cabine** | Cabine confortable avec large pare-brise et climatisation. Vitrage de sécurité, fenêtre de toit, chauffage à air autonome, organes de commande et instruments de contrôle. Cabine inclinable en arrière assurant au grutier une visibilité optimale. Une caméra est installée pour la surveillance des treuils. Pendant le transport, la cabine est basculée à l'avant de la partie tournante. |
| **Installation électrique** | 24 V courant continu (2 x accumulateurs 12 V, 200 Ah). |

## EQUIPEMENTS OPTIONNELS

| | |
|---|---|
| **Contrepoids** | 40 t sur la partie supérieure<br>contrepoids 7,5 t<br>contrepoids en fonte |
| **Roues de support** | Utilisées lors de déplacements sur site avec équipements et contrepoids partiel. |
| **Pneumatiques** | Pneus larges 17.00 R 25 disponibles. Largeur du châssis avec ces pneus: 3,15 m. |
| **Commande séparée des essieux AR** | |
| **Roue de secours avec support** | |
| **Climatisation** | Sur le châssis. |

## DESCRIPTIF TECHNIQUE

### CONFIGURATIONS DE FLÈCHE S ET L

| | |
|---|---|
| **SH:** | Flèche principale: pied 10,5 m (utilisé à installer treuils W1/H3),<br>intercalaires 12 m et 6 m (type 2724) et tronçon conique 12 m, tête avec jeu de poulies 600 t 1,5 m.<br>Longueurs de flèche principale: 24-84 m. |
| **SH / LH:** | Flèche principale: idem SH, allongée par type 2421 de la fléchette et par l'élément de pointe 7,5 m.<br>Longueurs de flèche principale: 66-102 m. |
| **SW:** | Flèche principale: idem SH.<br>Fléchette: pied 4,5 m, intercalaires 12 m et 6 m (type 2421) et élément de pointe 7,5 m.<br>Longueurs de flèche principale: 30-66 m.<br>Longueurs de fléchette: 24-84 m. |
| **SSL:** | Flèche principale: idem SH.<br>Equipement Superlift, contrepoids Superlift 0-300 t (par progression de 50 t).<br>Longueurs de flèche principale: 36-96 m. |
| **HSSL:** | Flèche principale: idem SH/SSL + kit à fortifier de flèche principale.<br>Equipement Superlift, contrepoids Superlift 0-300 t (par progression de 50 t).<br>Longueurs de flèche principale: 54-108 m. |
| **SSL / LSL:** | Flèche principale: idem SH 84 m, allongée par type 2421 de la fléchette et par l'élément de pointe 7,5 m.<br>Equipement Superlift, contrepoids Superlift 0-300 t (par progression de 50 t).<br>Longueurs de flèche principale: 90-138 m. |
| **SWSL:<br>(SFSL)** | Flèche principale: idem SH.<br>Fléchette: idem SW.<br>Equipement Superlift, contrepoids Superlift 0-300 t (par progression de 50 t).<br>Longueurs de flèche principale: 36-96 m.<br>Longueurs de fléchette: 24-96 m. |
| **HSWSL:** | Flèche principale: idem HSSL.<br>Fléchette: idem SW/SWSL.<br>Equipement Superlift, contrepoids Superlift 0-300 t (par progression de 50 t).<br>Longueurs de flèche principale: 54-108 m.<br>Longueurs de fléchette: 24-96 m. |
| **LF2:** | Flèche principale: idem SH, SSL, HSSL, SH/LH, SH/LH SGLmax; SSL/LSL, SSL/LSL SGLmax.<br>Longueurs de fléchette: 12, 24, 36 m.<br>Inclinaison de fléchette: 10°, 15°, 20° pour longueur de fléchette 12 m.<br>Inclinaison de fléchette: 10°, 20°, 30° pour longueurs de fléchette 24-36 m. |
| **SFVL:** | Flèche principale: idem SH, longueurs 42-96 m, sans jeu de poulies.<br>Fléchette: pied 4,5 m, intercalaire 6 m; tête levages-lourds 1,5 m.<br>Jeu de poulies 600 t idem SH. |
| **LFVL:** | Flèche principale: idem SH, longueurs 42-96 m, sans jeu de poulies.<br>Fléchette: pied 4,5 m, élément de pointe de fléchette 7,5 m. |
| **SH / LH SGLmax:** | Idem SH, allongée de kit à fortifier de flèche principale + élément de pointe de fléchette.<br>Longueurs de flèche principale: 78-102 m. |
| **SSL / LSL SGLmax:** | Idem SSL, allongée de kit à fortifier de flèche principale + élément de pointe de fléchette.<br>Longueurs de flèche principale: 90-138 m. |
| **Tambour de mouflage** | Monté sur la partie tournante. |
| **Sécurités** | Contrôleur d'état de charge électronique, contacteur de fin de course haut, limiteurs de mouvements de la flèche, retenues hydrauliques anti-basculement de la flèche, anémomètre. |

### EQUIPEMENT OPTIONNEL

| | |
|---|---|
| **Kit à fortifier de flèche principale** | Consiste de 2-4 tronçons additionnelles de type flèche principale; flèche principale standard de 84 m nécessaire. |
| **Equipement Superlift standard** | Mât 30 m, treuil avec câble et traverse pour 300 t. Radii du mât 11, 13 et 15 m par inclinaison de la position du mât. |
| **Equipement Superlift télescopique** | Mât 30 m, treuil avec câble, jonction télescopique et traverse pour 300 t. Position du mât 15 m. Contrepoids Superlift réglable de 13 à 17 m. |
| **Treuil H3** | Tambour supplémentaire sur la flèche principale (à utiliser avec LF2 ou runner). Effort au brin simple idem H1, longueur de câble 650 m. |
| **Runner 30 t** | Environ 2 m à installer en tête de flèche ou sur l'élément de pointe (pas en combinaison avec LF2). |
| **Runner 60 t** | |
| **Boulonnement hydraulique des intercalaires** | |
| **W1 en H3** | Utilisation de la variation de flèche W1 comme dispositif de levage H3. |

autovictor

## NOTES TO LIFTING CAPACITY · ANMERKUNGEN ZU DEN TRAGFÄHIGKEITEN · CONDITIONS D'UTILISATION

Ratings are in compliance with ISO 4305 and DIN 15019.2 (test load = 1.25 x suspended load + 0.1 x dead weight of boom head).
Weight of hook blocks and slings is part of the load, and is to be deducted from the capacity ratings.

Consult operation manual for further details.

**Note:** Data published herein is intended as a guide only and shall not be construed to warrant applicability for lifting purposes.
Crane operation is subject to the computer charts and operation manual both supplied with the crane.

In some instances the superlift counterweight does not lift off the ground with the indicated load.

Tragfähigkeiten entsprechen ISO 4305 und DIN 15019.2 (Prüflast = 1,25 x Hublast + 0,1 x Kopfgewicht).
Das Gewicht der Unterflaschen, sowie die Lastaufnahmemittel, sind Bestandteile der Last und sind von den Tragfähigkeitsangaben abzuziehen.

Weitere Angaben in der Bedienungsanleitung des Kranes.

**Anmerkung:** Die Daten dieser Broschüre dienen nur zur allgemeinen Information; für ihre Richtigkeit übernehmen wir keine Haftung.
Der Betrieb des Kranes ist nur mit den Original-Tragfähigkeitstabellen und mit der Bedienungsanleitung zulässig, die mit dem Kran mitgeliefert werden.

In einigen Fällen hebt das Superliftgegengewicht bei den angegebenen Traglasten nicht ab.

Le tableau de charges est conforme à la norme ISO 4305 et DIN 15019.2 (charge d'essai = 1,25 x charge suspendue + 0,1 x poids de la tête de flèche).
Les poids du crochet-moufle et de tous les accessoires d'élingage font partie de la charge et sont à déduire des charges indiquées.

Pour plus de détails consulter la notice d'utilisation de la grue.

**Nota:** Les renseignements ci-inclus sont donnés à titre indicatif et ne représentent aucune garantie d'utilisation pour les opérations de levage.
La mise en service de la grue n'est autorisée qu'à condition que les tableaux de charges ainsi que le manuel de service, tels que fournis avec la grue, soient observés.

Le contrepoids du superlift ne décolle pas dans certaines configurations des tableaux de charge.

## NOTES · NOTIZEN · NOTES

The information contained in this brochure / product catalogue merely consists of general descriptions and a broad compilation of performance features which might not apply precisely as described under specific application conditions or which may change as a result of further product development.
The desired performance features only become binding once expressly agreed in the final contract.

Subject to change without notice!

Die Informationen in dieser Broschüre / diesem Produktkatalog enthalten lediglich allgemeine Beschreibungen bzw. Leistungsmerkmale, die im konkre-ten Anwendungsfall nicht immer in der beschriebenen Form zutreffen bzw. die sich durch Weiterentwicklung der Produkte ändern können.
Die gewünschten Leistungsmerkmale sind nur dann verbindlich, wenn sie bei Vertragsabschluss ausdrücklich vereinbart werden.

Änderungen vorbehalten!

Les informations figurant dans la présente brochure / le présent catalogue de produit sont de simples descriptions ou des caractéristiques de performances générales qui ne correspondent pas toujours à la forme décrite dans le cas d'applications spécifiques concrètes ou qui peuvent varier en fonction des perfectionnements apportés aux produits.
Seules les caractéristiques de performances expressément convenues à la signature du contrat engagent notre société.

Sous réserve de modification!

09/06

TEREX | DEMAG

Registered office / Lieferanschrift / Siège social / Sede sociale / Sede social:

**Terex-Demag GmbH & Co.KG**
Dinglerstraße 24
D-66482 Zweibrücken

Phone: +49 6332 83-0
Fax: +49 6332 16715
www.terex-demag.com

Order Nr. TC 2800-1 B1 – 201 255 12